KURT WORKHOLDING

DX4H™ CROSSOVER™ HYDRAULIC VISE

Operating Instruction Manual
DX4H / DX4HR



ENGLISH

TABLE OF CONTENTS

Introduction 3
Setup Instructions 4
Hydraulic Set-up 5-9
Operating Instructions 10-15
DX4H Parts List 16
DX4H Mechanical Drawing 17
DX4HR Parts List 18
DX4HR Mechanical Drawing 19
KHU4 Mechanical Drawing 20
Maintenance Schedule 21-23
Troubleshooting Tips 24
Maintenance Log/Notes 25
Warranty 26

VISE DATA

Use this to fill out information about your vise for quick reference.

Purchase Date: _____ - _____ - _____
Purchase Order: _____
Purchased From: _____
Delivery Date: _____
Serial No.: _____

NOTE: MAKE SURE TO REGISTER YOUR WARRANTY ONLINE AT KURTWORKHOLDING.COM

INTRODUCTION

Thank you for purchasing a Kurt DX4H vise. You have just purchased one of the best machine vises in the industry. The outstanding accuracy of this product is second to none. Backed by a lifetime warranty against workmanship and material defects, this product is built to last when used and maintained properly.

The original Kurt Anglock vises are designed for precision clamping on basic machine tools such as knee-type mills and machining centers. They can be used for, but are not limited to, operations like precision boring, drilling, tapping, & finishing.

The patented Anglock design allows the movable jaw to advance in such a way that each pound of force forward induces a ½ pound of force downward which minimizes the jaw lift and increases accuracy. This, combined with the needle bearings, increases jaw clamping pressure. Other features include: 80,000 psi ductile iron body, hardened vise bed & jaw plates, and a semi-hard steel screw.

Fig.1

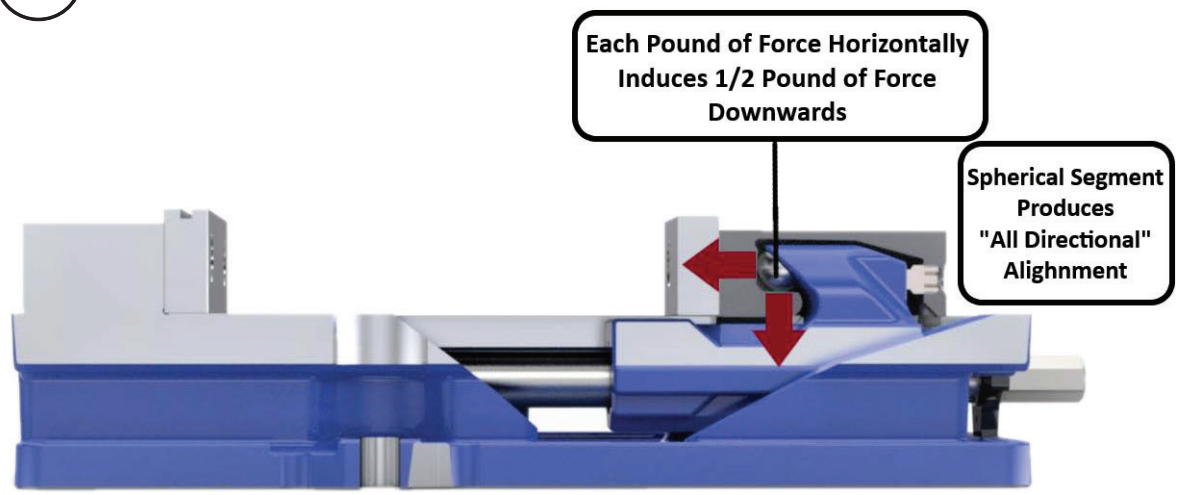

SET-UP INSTRUCTIONS

Now that you have your new Kurt Vise, it's time to set-up and begin using it. You will see that your new vise comes with a Kurt swivel handle and chip guard in the shipping carton (instruction manual available online at www.kurtworkholding.com). The chip guard rests between the ways of the vise and can be trimmed to size (see pg. 15) to help keep the chips away from the screw. The handle is specifically designed to provide maximum torque to your vise (clamping force provided below). Your vise should be mounted to a clean, flat surface. The surface and the vise must be free of any chips, dirt or debris of any kind. The mounting surface can be honed if necessary. Clean the bottom of the vise with solvent or another cleaner if needed.

To minimize vise bed deflection, clamp your Kurt vise to your machine table, pallet, or sub-plate using the built-in clamping slots or through the body holes provided.

Additional clamping can be used, but may not be necessary. Please be sure to exercise good judgment when securing your vise to the mounting surface. Be sure your vise is secured and will not move when applying the machine pressure.

Manual

Torque Ft.-Lbs.	Force in Lbs.
20	1900
30	3050
40	4300
50	5350
60	6450
70	7400

Hydraulic

Hydraulic PSI	Force in Lbs.
500	750
1000	1450
1500	2250
2000	3100
2500	3800
3000	4750
3200	4950

HYDRAULIC OPERATING INSTRUCTIONS

The DX4H can be operated hydraulically by hooking up the Kurt 4" Hydraulic Unit with a typical hydraulic pump or an air over hydraulic pump. Kurt offers several solutions for hydraulic pumps, one being the KHP3 air over hydraulic pump. Kurt offers other pump solutions and can be found on kurtworkholding.com.

The hydraulic unit (KHU4) on the end of the DX4H has a 1/4 inch stroke. The KHU4 can be used in both single and double acting applications. For single acting, a spring will return the vise to the opened position when hydraulics are disengaged. If double acting is desired, both ports on the hydraulic unit will need to be hooked up to a pump (See figure 2).

CAUTION: ALL NPT CONNECTIONS IN HYDRAULIC SYSTEM MUST UTILIZE PIPE DOPE, NOT TEFLON TAPE. TEFLON TAPE CAN GET DISLODGED BY FLUID AND END UP IN PUMP OR UNIT, POSSIBLY VOIDING WARRANTY.

Fig.2

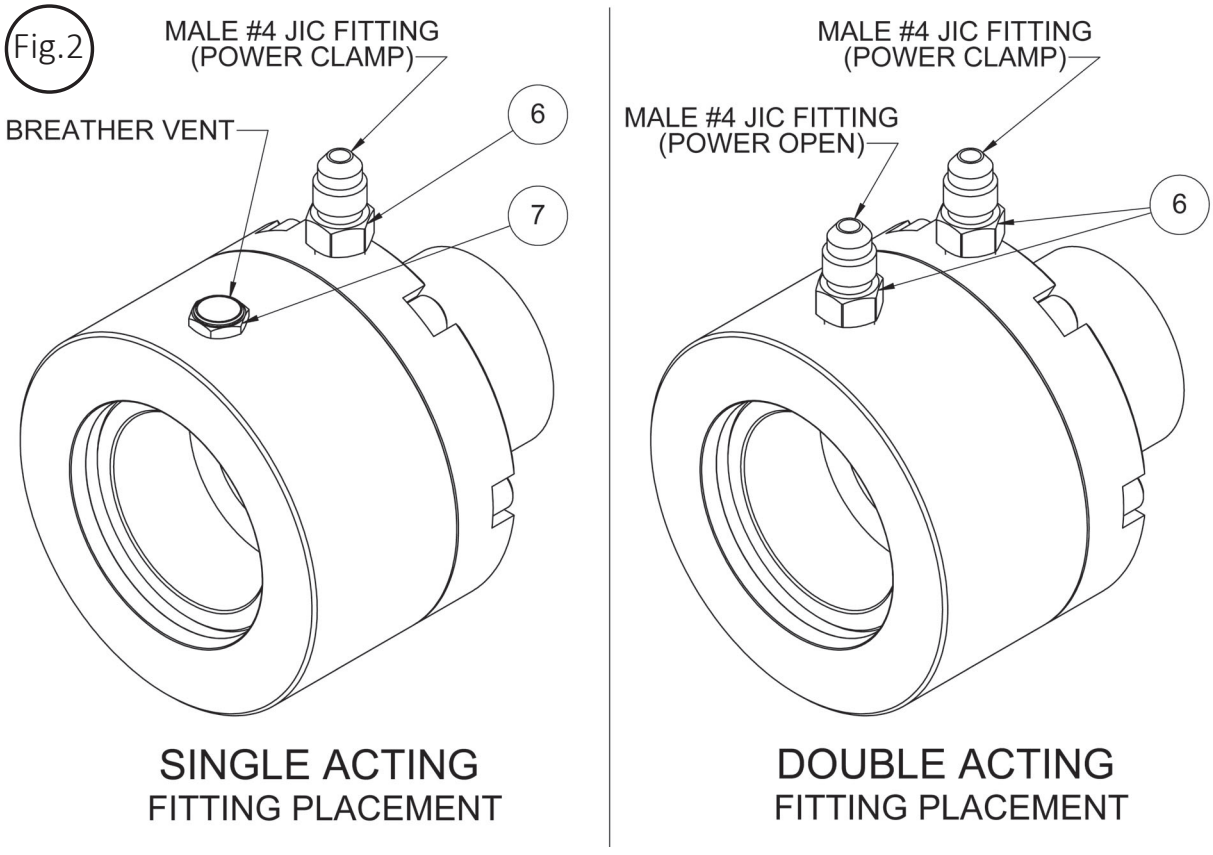

Note: A female #4 JIC fitting(s) is required at the end of the hydraulic line to mate up with the male #4 JIC fitting(s) on the hydraulic unit.

HYDRAULIC OPERATING INSTRUCTIONS

Basic Hydraulic Set-Up:

NOTE - The following set-up is specifically for the KHP3 pump

1. Remove plastic caps from pressure and release ports on Hydraulic pump. Install 90° fittings.

2. Remove plastic caps from pressure and release ports on hand or foot valve. Install straight fitting.

3. Install straight fitting on the Hydraulic Unit (1/8 NPTF) of the DX4H vise.

4. A filter-lubricator-regulator combination is recommended to insure clean air coming into the unit. See Clamping Force Chart for air pressure required to attain desired clamping force (pg. 5 & 9).

5. Connect the FRL to the input air port on the KHP3 hydraulic pump (See Fig. 4)

6. Connect the hydraulic line to the hydraulic unit on the vise and then to the output side of the hydraulic pump (Fig.2 & 4)

7. If using a hand valve or foot valve, connect the 3-line color-coded airline cluster to the corresponding ports on the valve and pump (Fig. 3 & 4).

8. Apply air pressure (80 PSI maximum) to system. Loosen swivel fitting at vise and bleed air. Tighten fitting. Release air pressure.

9. Repeat previous step until all air is purged

10. The KHP3 hydraulic pump will come pre-filled with oil (use #13 or DTE lite if needed)

11. System is now ready for use.

NOTE: For multiple vise hook-ups, call factory for recommendations.

HYDRAULIC SET-UP

NOTE - The following set-up is specifically for the KHP3 pump

Fig.3



Fig.4

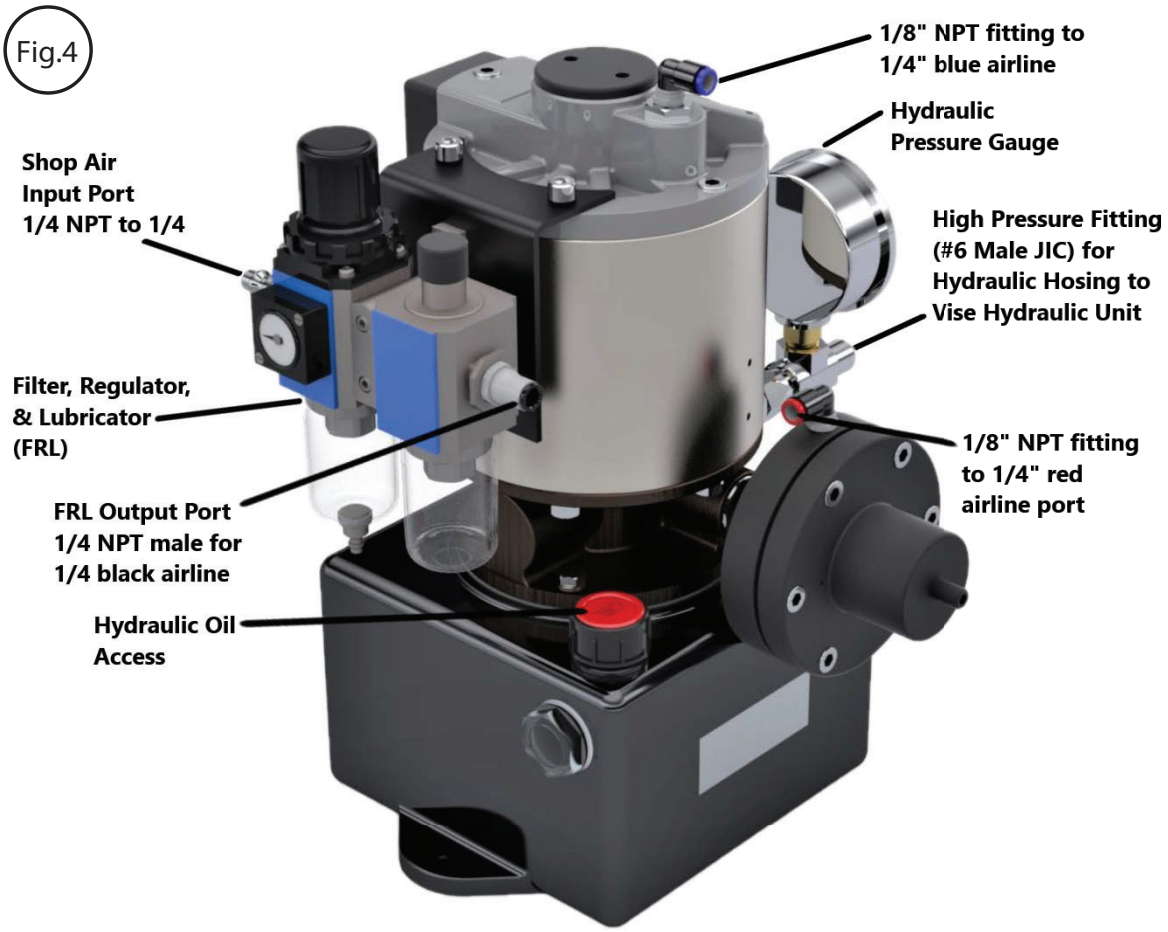

HYDRAULIC SET-UP

Fig.5

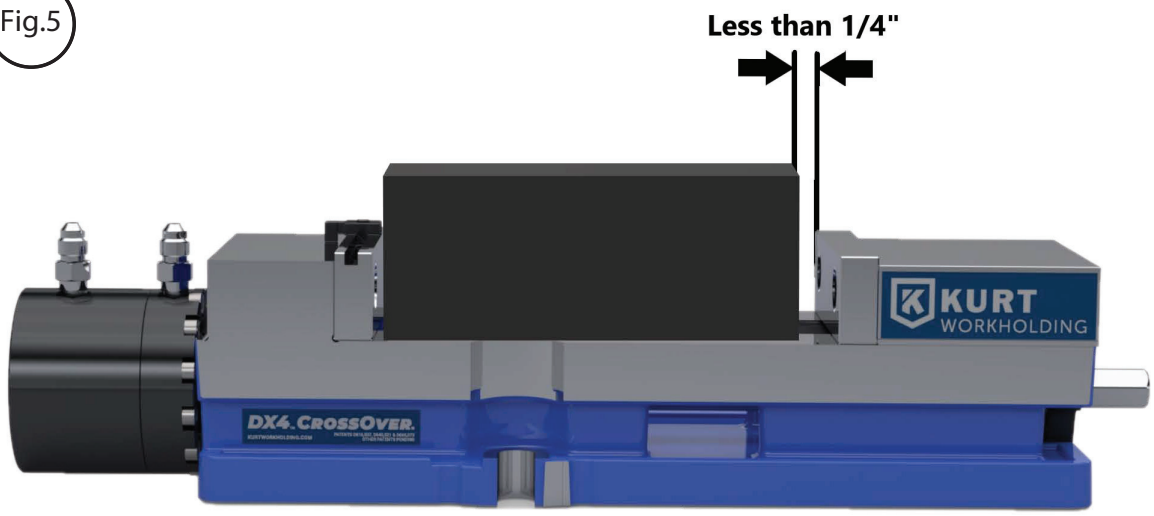

Jaw Positioning:

Once all plumbing is set up, it time to position jaws for hydraulic clamping.

1. Position jaws less than 1/4 inch from the part being clamped as is shown in figure 5 above. This is done manually by putting the handle onto the hex end and turning the screw until the jaws are in position.

2. Make sure the jaws are less than 1/4 inch from the part since the hydraulic unit has only a 1/4 inch stroke.

3. The vise is now ready to have the hydraulics engaged for clamping the part.

HYDRAULIC PUMP PERFORMANCE (KHP3)

Air Pressure Input to Hydraulic Pressure Output for Kurt Hydraulic Pump, KHP3

Fig.6

Flow and Pressure Performance Guides

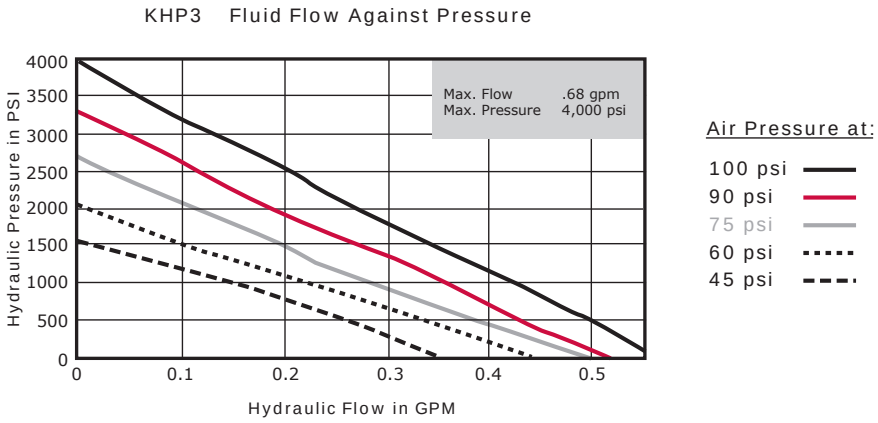

Air PSI Input	Oil PSI Output
20	150
30	500
40	900
50	1300
60	1800
70	2200
80	2600
90	3000
100	3400

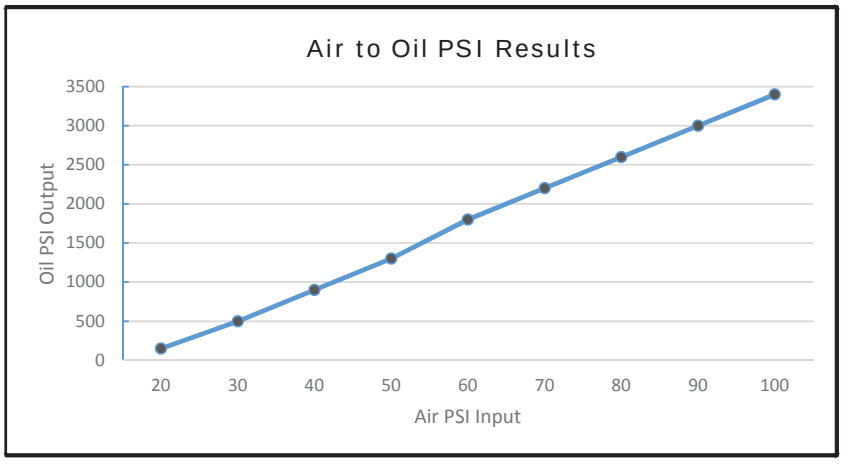

MANUAL OPERATING INSTRUCTIONS

For proper vise operation, insert the handle on to the hex end of the vise. Rotate clockwise to clamp and counterclockwise to unclamp your vise. This handle, combined with the correct amount of torque will provide you with all the clamping force you will need to machine your parts. **DO NOT** use any other type of pressure to open or close your vise.

The uses of handle extensions, air impact wrenches, breaker bars, or hammer strikes are not recommended and will void the warranty if used. This will also cause damage to the thrust bearing and screw threads. If you need more clamping force, you may require a larger vise. A torque wrench may be used if set within the torque limits shown in the tables on page 4.

To properly clamp a part in your Kurt vise, you should place the part in the center of the jaws resting on the ways of the vise. Clamping only on one side or above the movable and stationary jaws, can result in jaw lift or loss of accuracy. (See Fig. 7 on page 11)

If one-sided clamping is necessary, you MUST use a dummy part on the other side. When using parallels or step jaws, you must select a size that keeps the bottom of the clamped part at or below the top of the movable and stationary jaws. Always use jaw plates for clamping. If jaw plates are not used, damage to the mounting surface of the movable and stationary jaw will occur. This will result in reduced clamping accuracy and repeatability.

Fig.7

Sketch #2A

Incorrect part clamping.

Vise width centerline

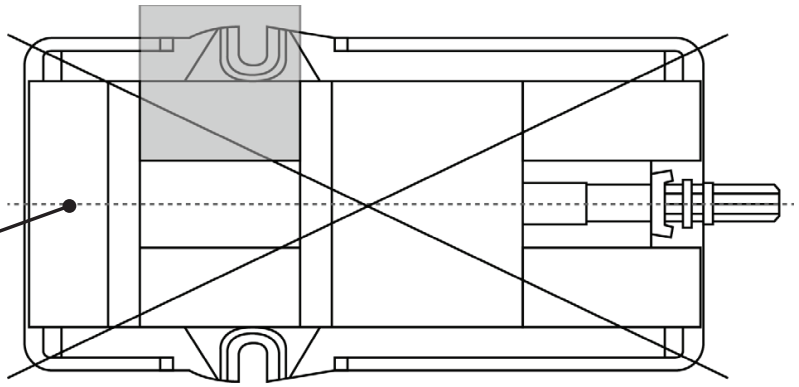

Sketch #2B

Correct part clamping.

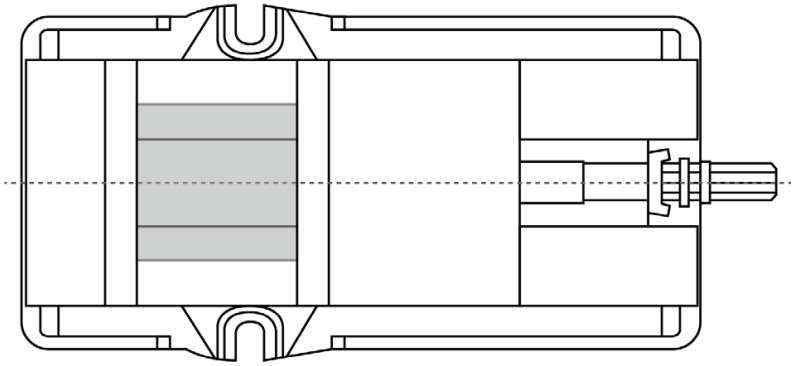

Sketch #2C

Correct part clamping.

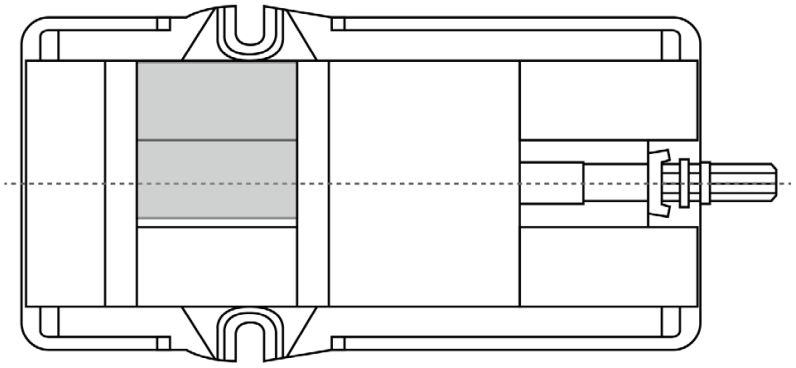

Sketch #2D

Correct part clamping.

Dummy spacer

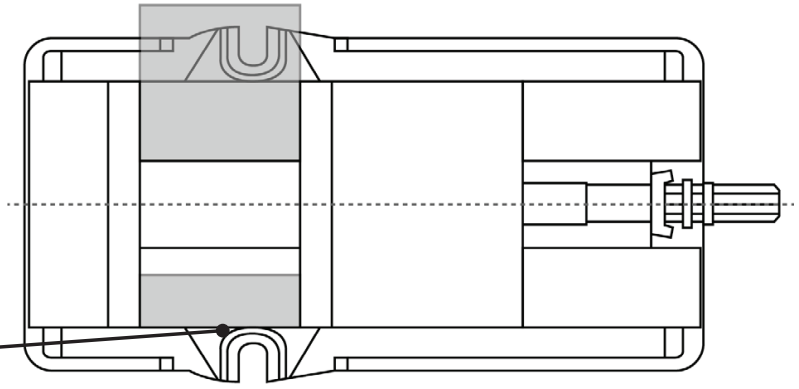

JAW POSITIONING

Fig.8

Note: Dimensions below are in inches unless specified.

AA	6.500
CC	10.137



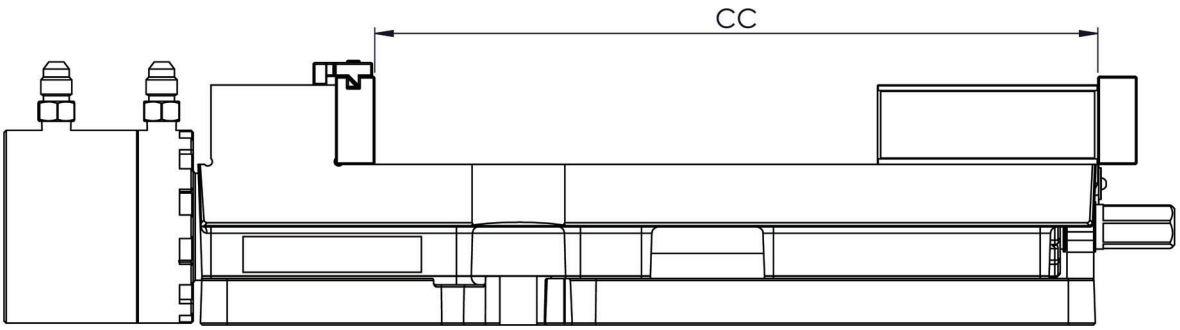

SIDE & END VIEW

Fig.9

Note: Dimensions below are in inches unless specified.

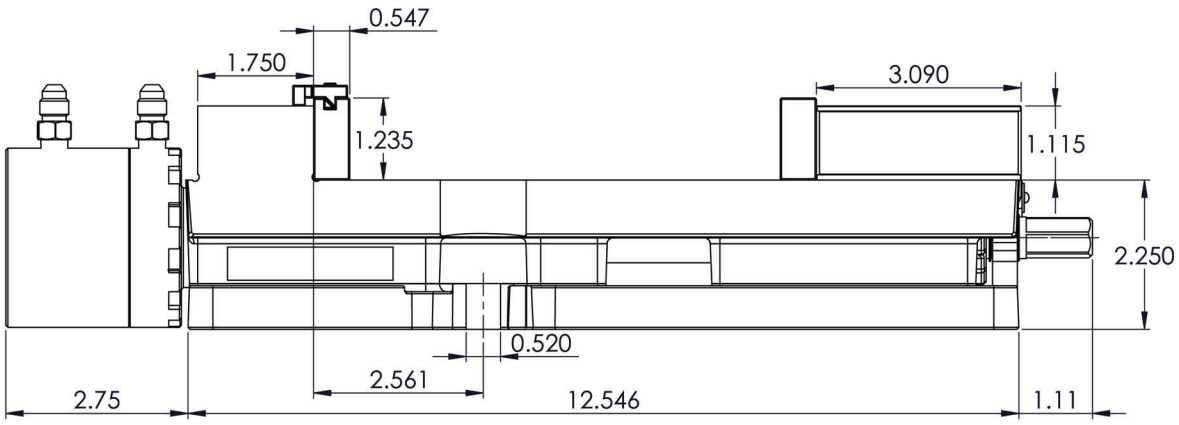

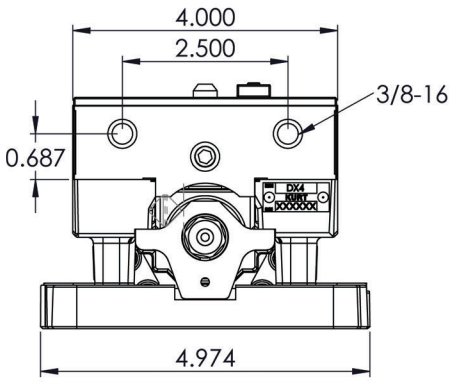

MOUNTING LOCATIONS

Fig.10

Note: Dimensions below are in inches unless specified.

M	0.26
Q	1.250
R	2.000
S	2.000
T	6.000
U	80 mm
V	160 mm
X	16 mm
Y	0.625
Z	0.620
GG	0.560
HH	1.08
MM	20 mm
QQ	1.29
RR	1.76

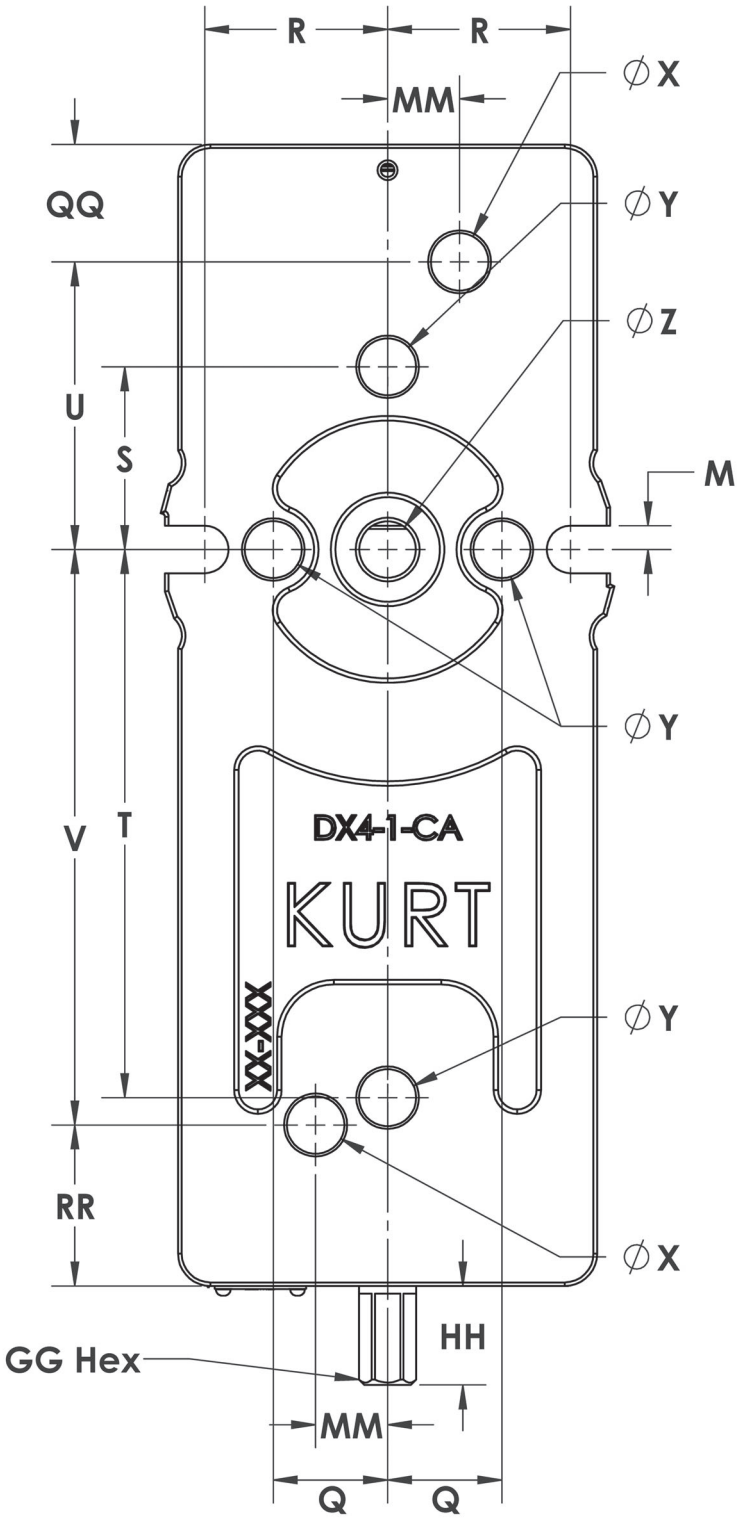

SURFACE MOUNT USING SINE KEYS

Mounting the new DX4H with keys requires the use of sine keys instead of standard keys. They are available in several different sizes that are listed on our website at www.kurtworkholding.com. The keys are sold in sets of 2 per package.

English Mounting:

The DX4H can be properly located using the four English sine key holes indicated by the Y's in figure 5 above. The DX4H vise can also be mounted using both bolt slots on the sides of the vise.

Metric Mounting:

The DX4H can be properly located using the two Metric sine key holes indicated by the X's in figure 5 above.

PROPER CHIP GUARD INSTALLATION AND USAGE

Fig.11

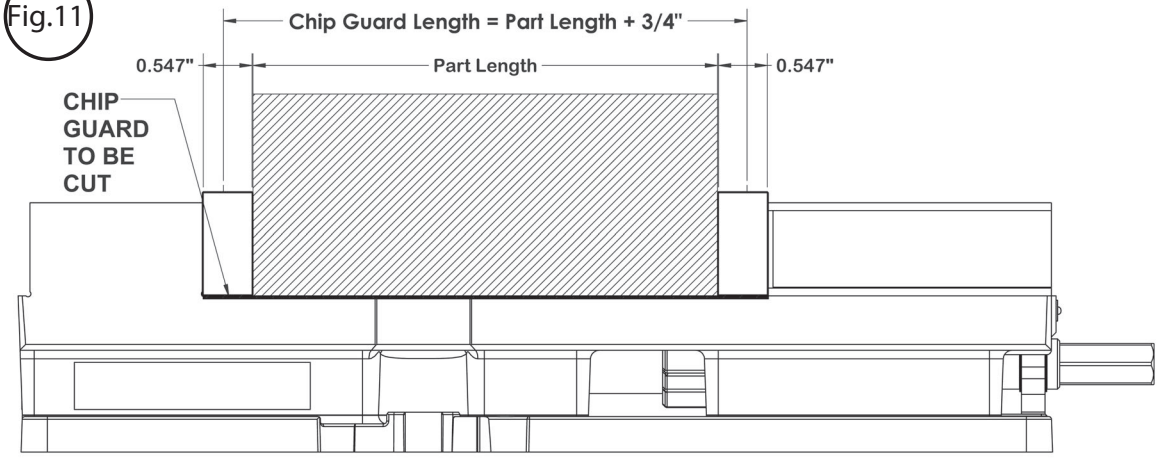

CAUTION:

Chip Guard stock shown above is provided to keep chips from the nut and screw assembly and must be cut and deburred to meet your application and safety needs.

Example: Part plus 3/4 inch = Length of Chip Guard.

Note: Remove Chip Guard stock. If left uncut, the excess material could cause injury.

DX4H Parts List

ITEM NO.	PART NUMBER	DESCRIPTION	QTY.
1	DX4-1	BODY, MACHINING	1
2	DX4-2	MOVABLE, MACHINED	1
3	DX4-3	NUT, MACHINED	1
4	3400H-5	SCREW	1
5	D40-7	JAW PLATE	1
6	3400V-8	2-PIECE RETAINING NUT	1
7	D40-9	SEGMENT TAB	1
8	D40-41	THRUST BEARING	1
9	D40-42	THRUST BEARING WASHER	2
10	3600AA-68	O-RING #115 (11/16 I.D. X 7/8 O.D. X 3/32)	1
11	HDHLM4-96	O-RING #125 1 5/16 I.D. X 1 1/2 O.D. X 3/32	1
12	3400V-147	SPIRAL RETAINING RING	2
13	DX4-169	WAVE RING	2
14	PT400-211	BRUSH SEAL	2
15	3400V-224	SCREW SUPPORT	1
16	WSRLE46	WORK STOP	1
17	D40-315	4" GROOVED JAW PLATE	1
18	01-3906	HDOG SHSS 3/8-16 X .625 LG	1
19	00-1353	SHCS 3/8-16 X .88 LG	4
20	00-1191	SHCS 8-32 X .375 LG	4
21	KHU4	KURT HYDRAULIC UNIT	1
22	01-3265	SCREW, SHSS, #10-24 X 5/8	1

DX4H Mechanical Drawing

Fig.12

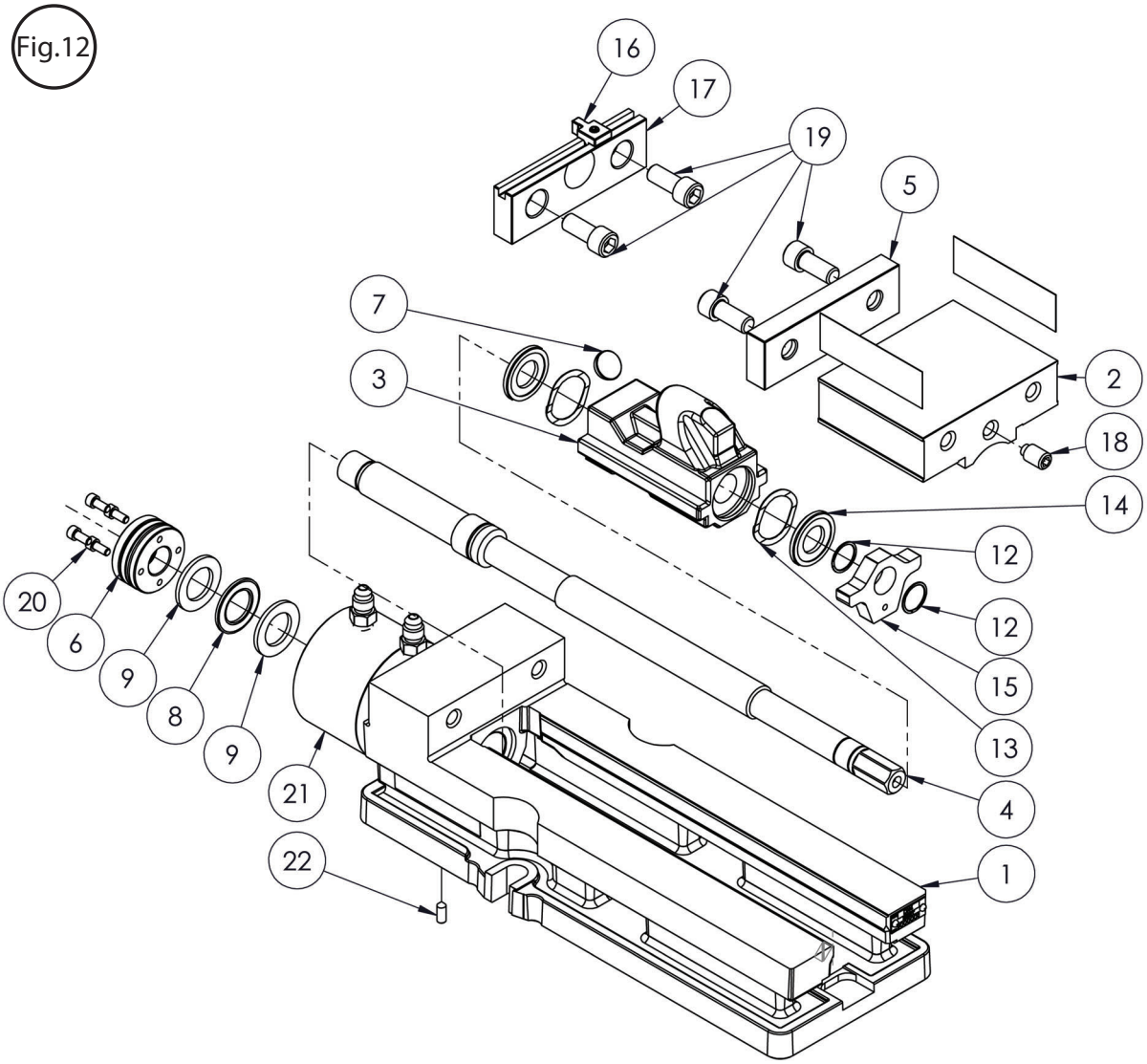

DX4HR Parts List

ITEM NO.	PART NUMBER	DESCRIPTION	QTY.
1	DX4-1	BODY, MACHINING	1
2	DX4-2	MOVABLE, MACHINED	1
3	DX4R-3	NUT, MACHINED REVERSE	1
4	3410H-5	SCREW	1
5	D40-7	JAW PLATE	1
6	3400V-8	2-PIECE RETAINING NUT	1
7	D40-9	SEGMENT TAB	1
8	D40-41	THRUST BEARING	1
9	D40-42	THRUST BEARING WASHER .093 THK	2
10	DX4-169	WAVE RING	2
11	PT400-211	BRUSH SEAL	2
12	WSRLE46	WORKSTOP	1
13	D40-315	4" GROOVED JAW PLATE	1
14	01-3906	HDOG SHSS 3/8-16 X .625 LG	1
15	00-1353	SHCS 3/8-16 X .88 LG	4
16	00-1191	SHCS 8-32 X .375 LG	4
17	KHU4	KURT HYDRAULIC UNIT	1
18	01-3265	SCREW, SHSS, #10-24 X 5/8	1

DX4HR Mechanical Drawing

Fig.13

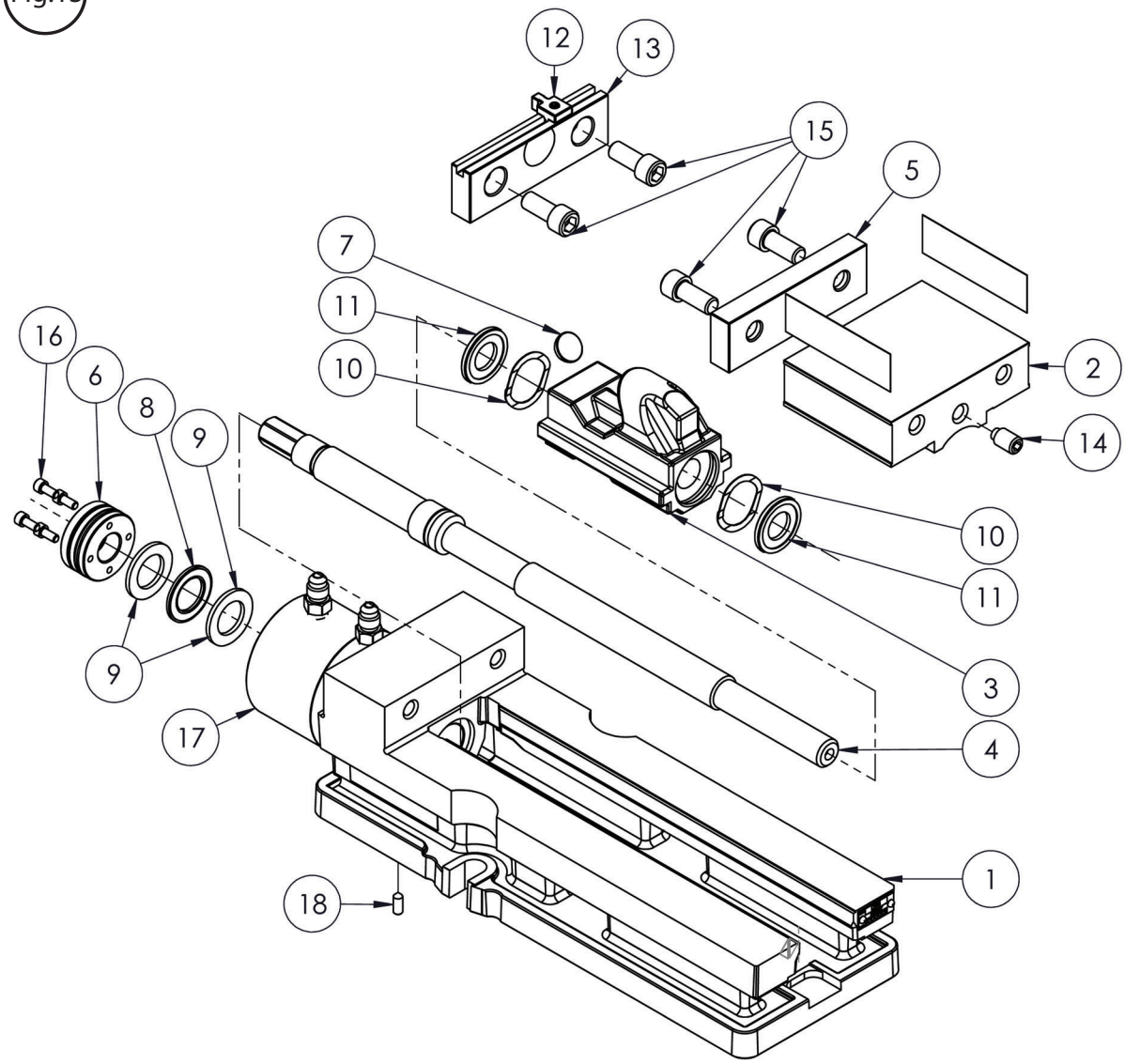

KHU4 Mechanical Drawing

Fig.14

ITEM NO.	PART NUMBER	DESCRIPTION	QTY.
1	4BHU-87	COMPRESSION SPRING	1
2	KHU4	Hydraulic Unit 4"	1
3	4THU-230	WASHER	2
4	2404-04-02	FITTING, 4MJ - 2MP	1
5	PCFBR-02	1/8 NPT BREATHER	1
6	D40-41	THRUST BEARING TORRINGTON #NTA-1220	1
7	D40-42	THRUST BEARING WASHER #TRC-1220 .093 THK	2

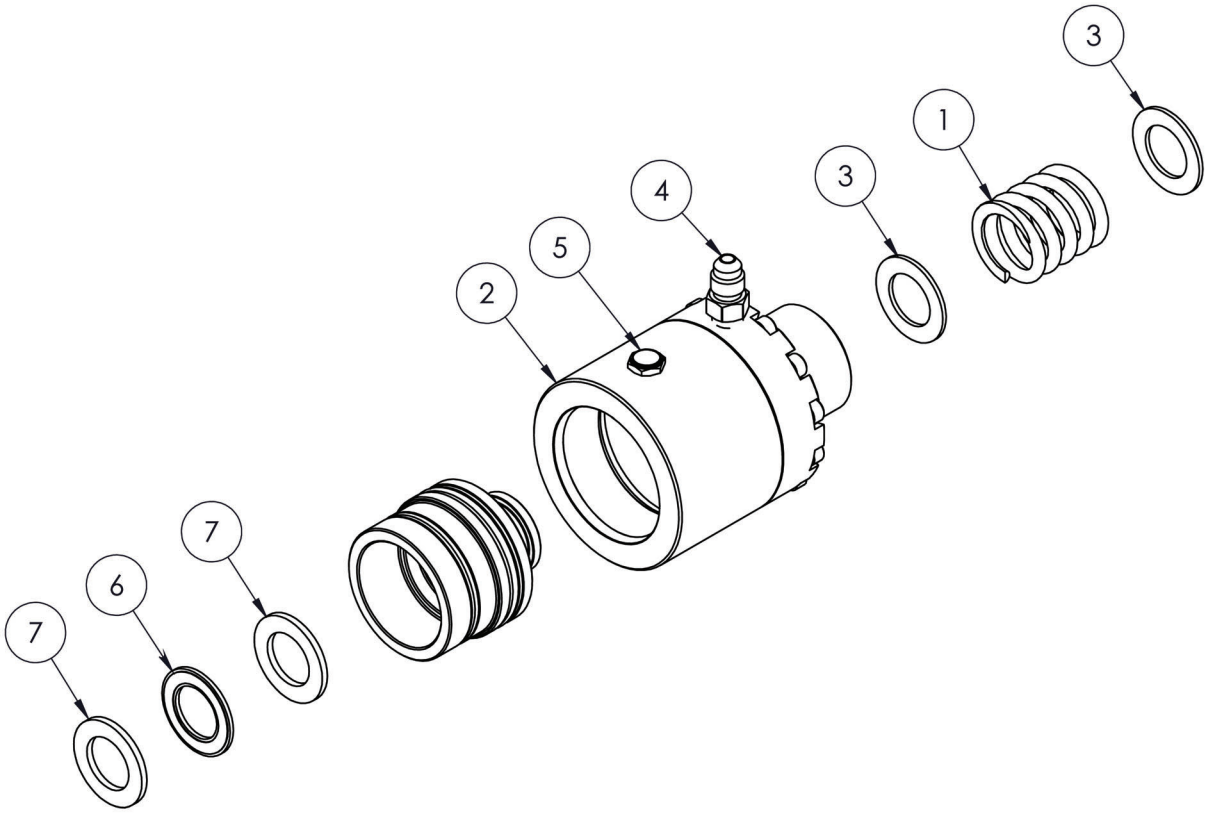

Maintenance Schedule

It is very important to perform regular maintenance on your Kurt vise to ensure proper operation. Improper maintenance will result in poor vise performance and may void your warranty.

Daily/ Weekly

1. Remove chips from surface of vise.
2. Visually inspect seals for damage and cleanliness.
3. Visually inspect for chip entrapments and remove when necessary.
4. Air-dry and apply rust inhibiting oil to the machined surface of the vise.

Monthly

1. Open the vise to the maximum opening.
2. In the back of the movable jaw (handle end, center hole) loosen the socket head set screw (approx. 6 turns). With the hex key (Allen wrench) in the set-screw socket, lift up and forward to pivot the Jaw off of the vise bed.
3. Slide the Jaw slightly toward the stationary jaw and lift up to remove the jaw from the “beak” of the nut.

   Note: A spherical segment (shaped as ½ of a steel ball) is inside the cavity of the movable jaw and may fall out as the jaw is removed. Take care not to lose or misplace the spherical segment.
4. Turn the movable jaw over and clean the inside cavity. Also clean the spherical segment.
5. Remove chips, clean and apply a light coat of machine oil to the machined surface of the following item:

   a. Nut & Screw assembly (clean exposed threads on the screw)
   b. Bed of vise (top of “rails”)
   c. Inside of the vise between the center ways.

6. To re-assemble the movable jaw, apply a “glob” of grease to the under side of the movable jaw in the pocket. Place the spherical segment in the mating pocket and push into the grease. The grease will hold the segment in place when the jaw is turned over to replace.

7. Tip the jaw so the front of the jaw (the side with the jaw plate) is on the vise bed. Lower the jaw on to the bed so that the segment contacts the hook part of the nut and rest the jaw on to the vise bed.
8. Tighten the setscrew to firmly contact the nut. Back off the setscrew ¼ turn (approx.).

   Note: DO NOT leave the setscrew tightened firmly to the nut as this may cause improper operation. The movable jaw is designed to move slightly (pivot side to side) so maximum jaw plate contact is maintained when clamping out-of-parallel, sawed, or cast parts.
9. Your vise is now ready for use. Open and close your vise to check for proper operation. Center the part to be clamped in the vise and close. Your parts should be centered from side to side to ensure proper clamping.

Fig.15

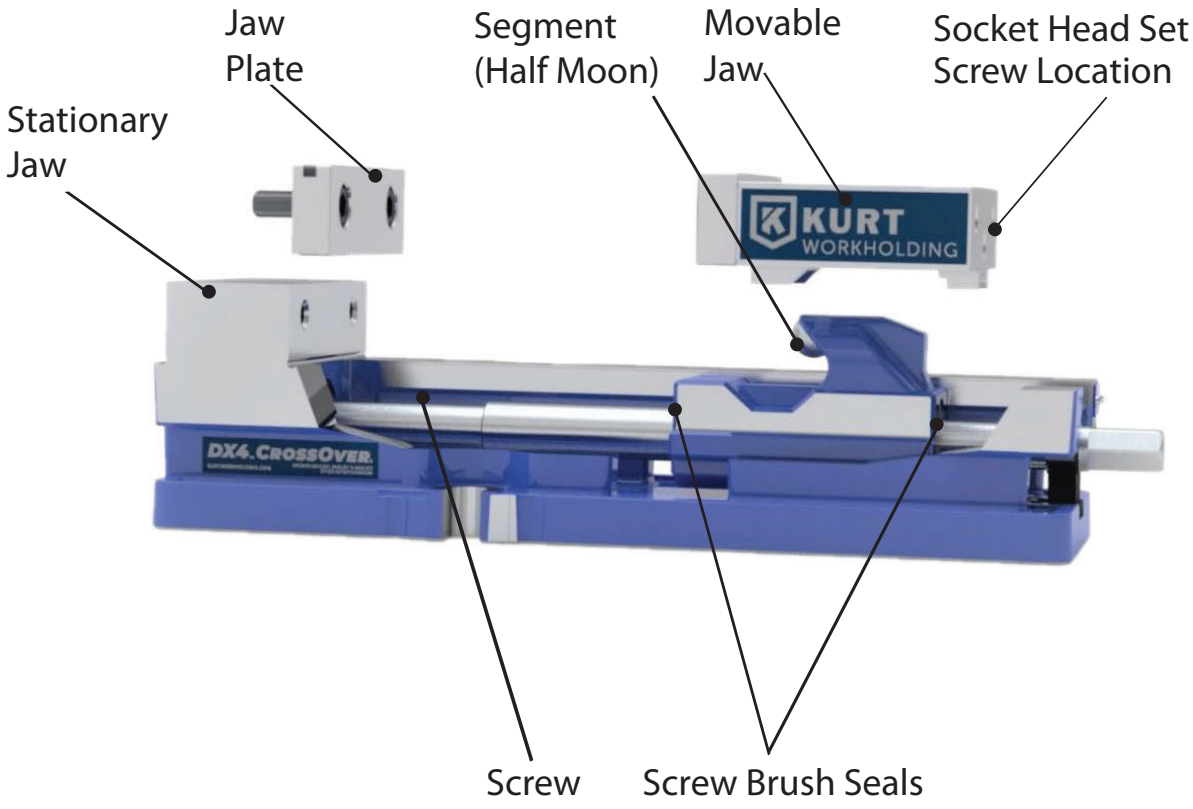

3 to 6 months

1. Open vise to maximum opening.
2. Loosen the set-screw and remove the movable jaw.
3. Remove spiral-retaining ring from handle end of the vise screw.
4. Remove the screw support from the vise body.
5. Remove the two-piece locking collar by removing the four SHCS.
6. With one screw still half-way out spin off the first collar.
7. Using a pin or screw reach into the second collar and spin it off to expose the bearings.
8. Remove the bearing pack assembly consisting of (2) thrust washers and (1) thrust bearing from the counter bore in the end of the body.
9. Clean and inspect the counter bore, thrust washers and thrust bearing.
10. Apply water resistant grease to the bearing pack (i.e. marine grade grease)
11. Install thrust bearing assembly on the screw in the reverse manner.
12. Install the first collar by threading onto the screw until it stops. (See Fig. 16)
13. Install the second collar behind the first and thread on until it stops. At this point the screw holes may or may not be lined up.
14. Turn the second collar counterclockwise until a hole lines up.
15. Then turn the collar back TWO (2) more screw holes. This will allow proper separation for the collar sections to lock on the threads and keep the bearings firmly in place. (See Fig. 16)
16. Install the four SHCS and tighten in a star pattern.
17. Install the screw support in the body on the screw (Hex end) and secure using the spiral retaining ring.
18. Your vise is now ready to use.

Fig. 16

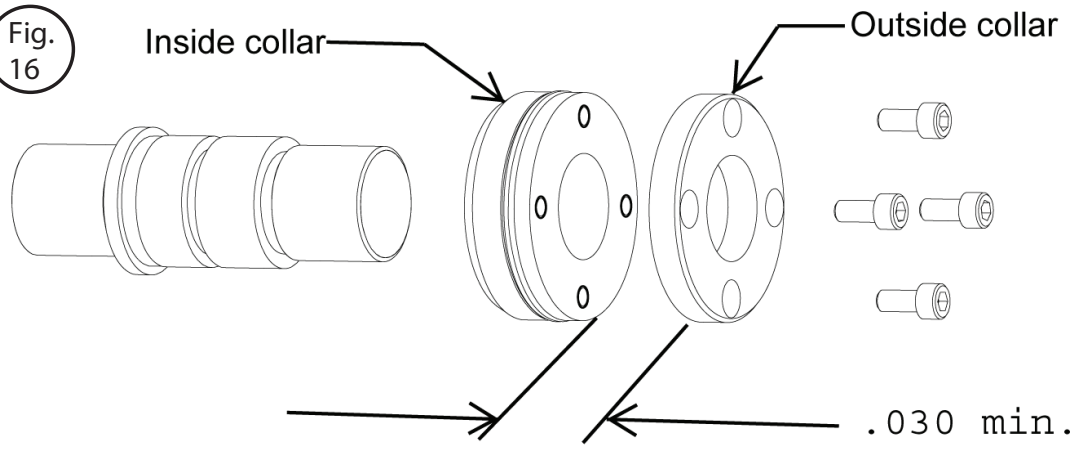

Troubleshooting Tips

If properly maintained, the Kurt DX4 Series vise will operate trouble free for many years. In some cases, it will be necessary to troubleshoot. Use the information below to help in the process.

Problem: My vise turns hard.
Tip: As a new vise the brush seal could be stiff. Allow for break in of vise.
Tip: As a used vise, it could be filled with chips and threads could be jammed. Properly clean and grease vise.

Problem: My vise will not turn in either direction.
Tip: The vise is jammed with debris. Disassemble and clean as needed.

Problem: My vise won't hold tolerance.
Tip: You may be experiencing jaw lift from clamping too high or on one side of the jaw. Lower the part in the vise jaw and clamp more material.

Problem: My vise is stiff when clamping on a part or is difficult to back off a part.
Tip: The vise's thrust bearing pack may need to be replaced.

Problem: My vise is not clamping at a high clamping force.
Tip: The vise's thrust bearing pack may need to be replaced.

MAINTENANCE LOG/NOTES:

LIFETIME WARRANTY
IRON CLAD™

All Kurt Manufacturing Company industrial workholding products and parts with the exceptions noted below, are warranted against defects in material and workmanship for the life of the product or part. (The life of the product is defined as that point in time when such item no longer functions due to normal wear and tear.) Failure to properly maintain and/or properly operate the product or part that has been worn out, abused heated ground or otherwise altered, used for a purpose other than that for which it was intended, or used in a manner in consistent with any instructions regarding its use. The sole obligation of Kurt Manufacturing Company, Inc. (Kurt) and the purchaser's SOLE AND EXCLUSIVE REMEDY hereunder, shall be limited to the replacement or repair of any Kurt product or part (by an authorized Kurt technician) which are returned to Kurt Manufacturing Company's place of business, transportation, shipping and postal charges prepaid, and there determined by Kurt Manufacturing Company to be covered by the warranty contained herein.

THE LIMITED WARRANTY DESCRIBED HEREIN IS MADE EXPRESSLY IN LIEU OF ANY OTHER EXPRESSED OR IMPLIED WARRANTIES, INCLUDING ANY IMPLIED WARRANTY OF MERCHANTABILITY OR FITNESS FOR A PARTICULAR PURPOSE. KURT MANUFACTURING COMPANY IS NOT RESPONSIBLE FOR THE IMPROPER USE OF ITS PRODUCTS. KURT SHALL NOT BE LIABLE FOR ANY DIRECT, INDIRECT, INCIDENTAL SPECIAL OR CONSEQUENTIAL DAMAGES, INCLUDING BUT NOT LIMITED TO, LOSS OF USE, REVENUE OR PROFIT.

KURT ASSUMES NO LIABILITY FOR, AND MAKES NO WARRANTY REGARDING ANY PURCHASE ITEMS WHERE THE MANUFACTURER OF SUCH ITEM EXTENDS A SEPARATE WARRANTY.

KURT WORKHOLDING

Thank you for your purchase! If you have any feedback or questions please contact us at.

kurtworkholding.com

Kurt Industrial Products // A Division Of Kurt Manufacturing
9445 East River Road NW | Mpls, MN 55433 | workholding@kurt.com
Phone 763-574-8309 | Toll Free 877-226-7823
Fax 763-574-8318 | Toll Free Fax 877-226-7823

Manual Revision:
12.14.2022