







CHUCK · CLAMPS · CYLINDER

www.trd-tools.ru

CX

Cylinder piston

- Ultra-thiRear pull type elastic collet cover.
- It is suitable for CNC lathe, special machine or other rotary cutting machine.
- Simple and direct structure with high accuracy, high speed and high rigidity.
- Convenient for installation, and the connection types are divided into two forms: short cone and straight step.

Note: if the step type is selected, the diameter of A size will be increased by 30mm on the original basis.



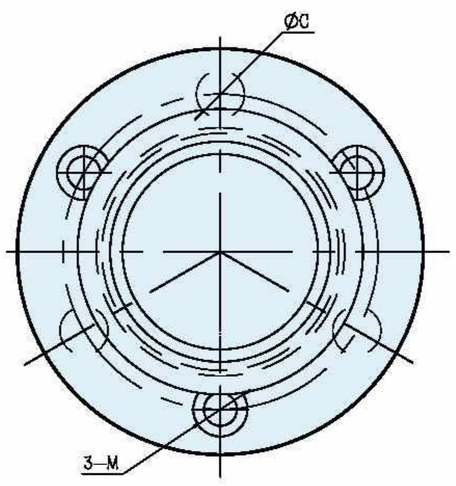

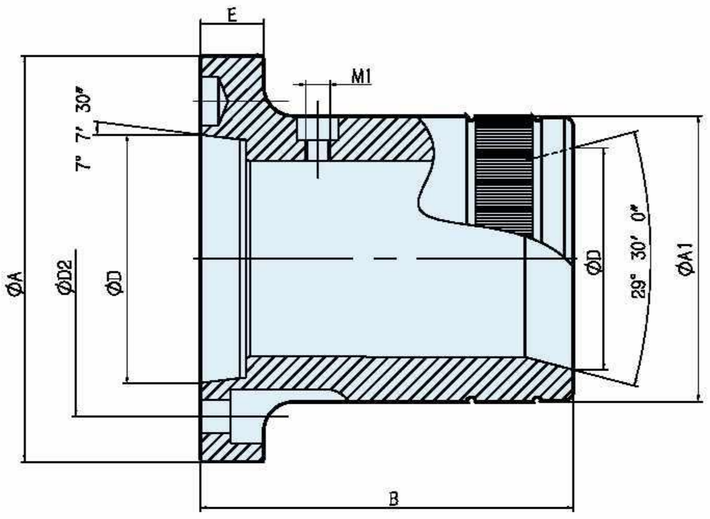

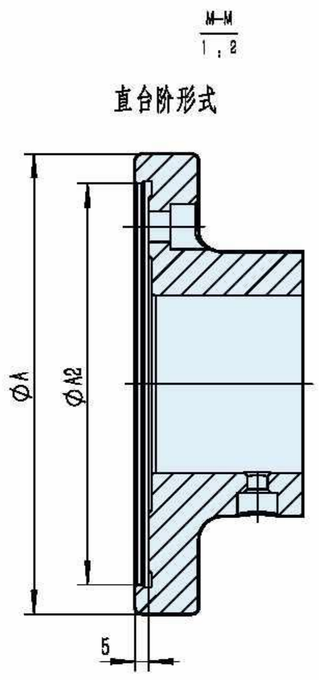

Size parameter

规格 Spec.	A	A1	A2	D	D1	D2	B	E	M1	C	3-M（安装孔）
CX36A4	110	80	110	63.513	58.5	82.6	115	20	M6	15	3-M10
CX46A5	132	95	140	82.563	73.5	104.8	120	22	M8	16	3-M10

Performance parameters

Model	Sleeve trip	Full bore	Most Generous Material	Maximum Hexagon	Applicable Hydraulic Cylinder	Max.Speed(r.p.m)	Max. Service Pressure
CX36A4	6	36	25	30	TK536	5000	2.5(25)
CX46A5		46	32	36	TK646	4000	2.8(28)

KJS

Solid chuck

- Patented product, cylindrical form of connection.
- This product has a front-mounted built-in structure and is easily installed, with a connection method following industry standards; safe and reliable with a long service life, it has high clamping precision, works fast, and can afford high speed, without no need of power cylinder.
- Applicable for batch processing and precision machining of plate and short-shaft parts.
- Repeated positioning accuracy of up to 0.01mm.





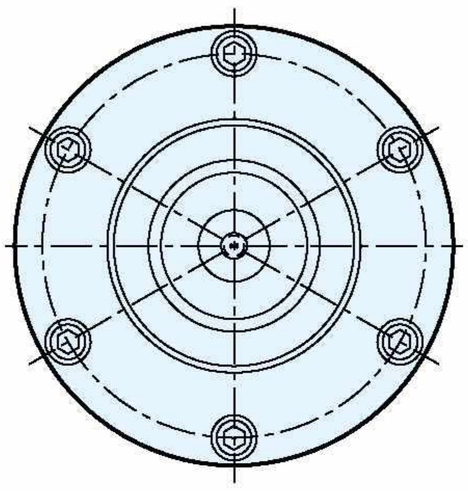

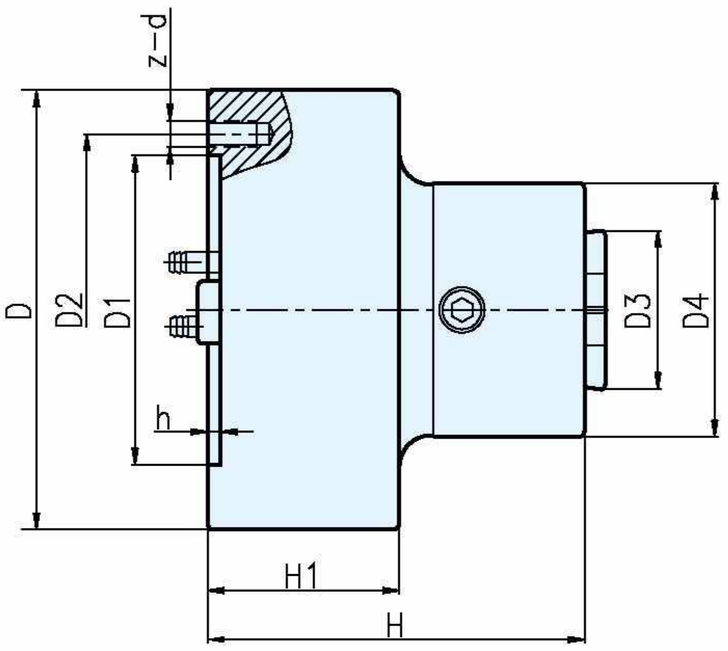

Size parameter

Spec.	D	D1	D2	D3	D4	h	H	H1	z-d
KJS130	135	95	108	48	78	4	119	59	3-M8
KJS160	172	130	142	60	86	5	127	60	3-M8
KJS200	208	165	180	78	110	5	135	60	3-M10

Performance parameters

	(KN/kgf)	(r.p.m)	Mpa	d-max	d-max	d-max	kg
Spec.	Maximum (KN/kgf)	Maximum speed (r.p.m)	Permissible pressure Mpa	Maximum clamping diameter d-max	Maximum clamping square d-max	Maximum clamping hexagon d-max	Weight Kg
KJS130	21/2142	3800		22	16	20	7
KJS160	40/4080	3400	0.4~0.8	35	25	30	13
KJS200	58/5916	3000		50	35	45	19

KJT

Front-mounted hollow collet chuck

- Patented product, cylindrical form of connection.
- Front-mounted hollow precision collet, with repeated positioning accuracy of up to 0.01mm.
- Concealed cylinder, with high speed, with no extra clamping power unit.
- An axial positioning device can be installed to improve the axial accuracy and processing efficiency of workpieces.
- Suitable for CNC lathes, vertical and horizontal machining centers, fourth axis and other automation equipment, and feed clamping processing can be automated.
- Chuck will not shrink and can control the positioning length of the workpiece.
- When pressure is interrupted, chuck keep clamping.



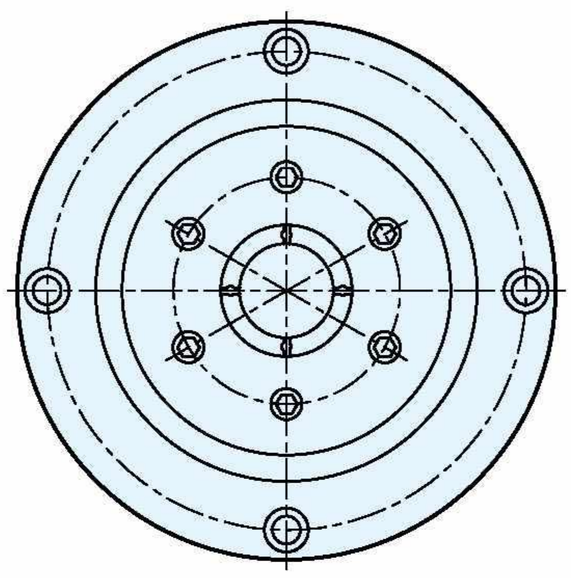

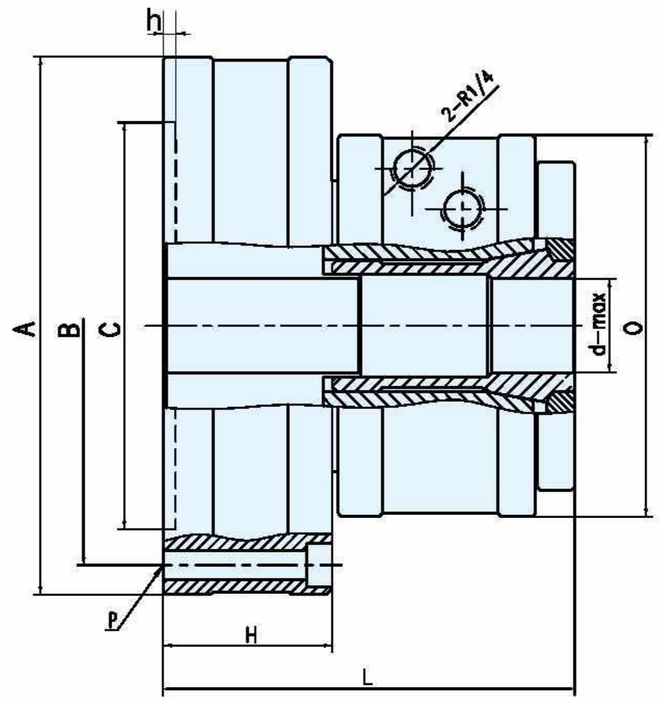

Size parameter

规格 Spec.	A	B	C	O	H	L	P	h
KJT15	100	84	70	71	40	85	4-M6	5
KJT25	167	147	130	104	48	108	4-M8	5
KJT40	187	168	150	133	50	122	4-M8	5
KJT60	222	203	170	168	55	130	4-M10	5

Performance parameters

	(r.p.m)	cm^2				Mpa	d–max	d–max	d–max	kg
Spec.	Maximum speed (r.p.m)			Apply to chuck	Chuck taper	Permissible pressure Mpa	Maximum clamping diameter d-max	Maximum clamping square d-max	Maximum clamping hexagon d-max	Weight
KJT15	4000	39.5	37	YB-15	30°	0.3~0.8	φ15	10	12	3.2
KJT25	3000	128	119	YB-25	20°	0.3~0.8	φ25	18	22	9.5
KJT40	2500	161	145	16C	20°	0.3~0.8	φ40	28	35	13.5
KJT60	2000	235	208	20C	20°	0.3~0.8	φ60	42	52	20.5

KJA-Q

Front-mounted hollow collet chuck

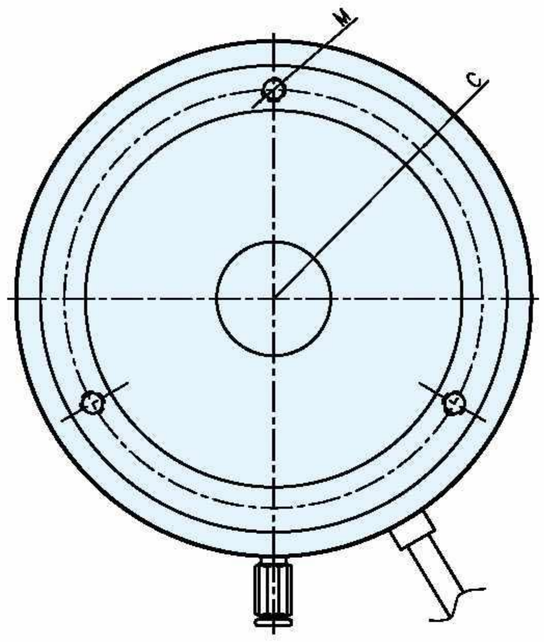

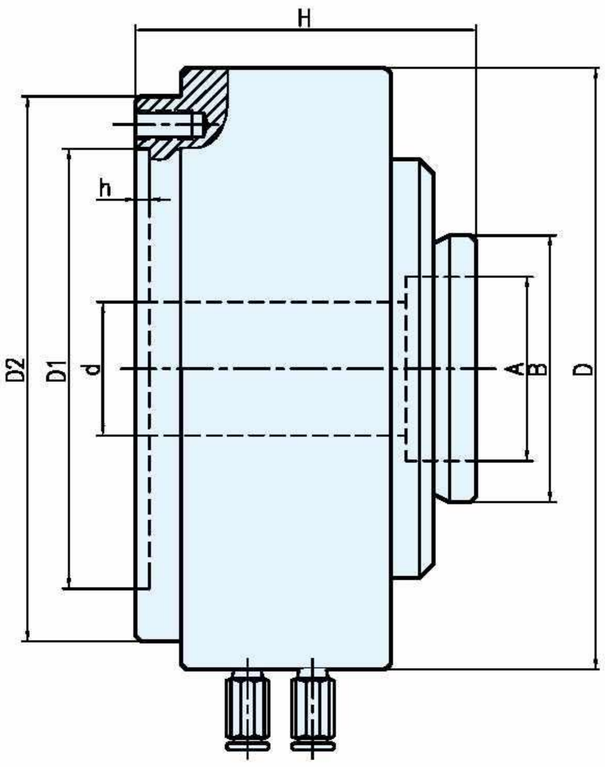



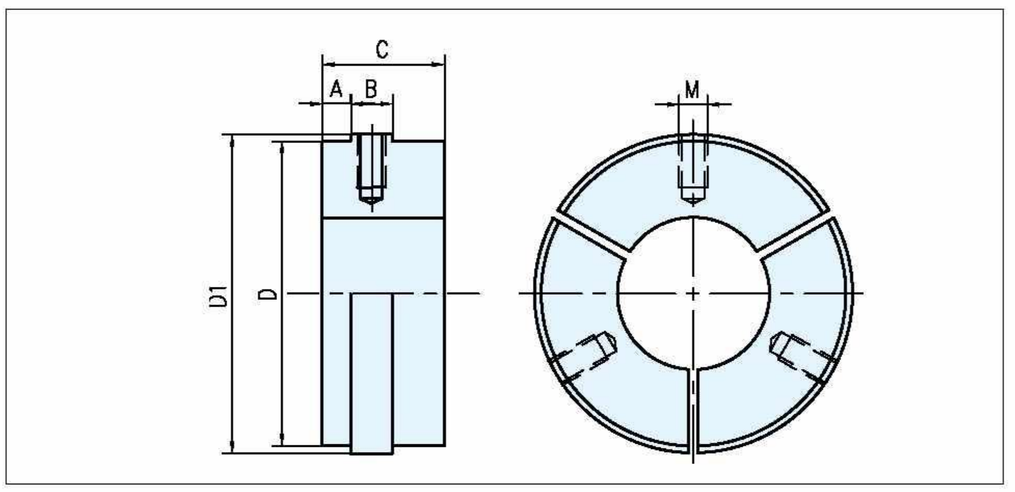

Spec. / Dimension	KJA25-Q	KJA40-Q	KJA70-Q
D	45	65	105
D1	48	68	180
A	5	6	6
B	7	9	9
C	19	26	26
D	M5	M6	M6

- Front-mounted hollow collet chuck, internal-mounted cylinder, need not to match power cylinder.
- The clamping precision is 0.05~0,08mm, away from the chuck end 10mm.
- Applicable to CNC lathe, ordinary lathe and other automatic equipment, can realize the processing of automatic feeding and clamping.
- Aluminum alloy cylinder body, light weight, good heat dissipation.

Size parameter

Spec.	D	D1	D2	d	A	B	H	M	C	h
KJA25-Q	170	100	135	26	45	68	105	3-M8	115	4
KJA40-Q	212	155	192	46	65	94	128	3-M10	172	5
KJA70-Q	266	155	192	68	105	136	142	3-M10	172	5

Performance parameters

Spec.	Maximum speed (r.p.m)	Piston area cm^2	Permissible pressure Mpa	Maximum clamping diameter d-max	The biggest hole	Maximum clamping hexagon d-max	Weight
	(r.p.m)	cm^2	Mpa	mm	mm	mm	kg
KJA25-Q	1800	115^2cm	0.2~0.8	1.5	26	25	6.3
KJA40-Q	1600	182^2cm	0.2~0.8	1.5	46	45	12.9
KJA70-Q	1400	292^2cm	0.2~0.8	1.5	68	67	20.5

Note

- Please add a shield when rotate at high speed to avoid objects shot hurting people.
- This chuck's waterproof ability is insufficient, please don't use cutting fluid.
- Have a probability of stuck. When used for automatic feeding device, there is the trouble of disruption.

KJZ

Expansion chuck

- Front-mounted power supply design, easy installation, need not to match back cylinder.
- According to different specifications, can achieve super quantity expansion of 0.5~1.5.
- Short cylindrical connection method of industry standards, and widely applied.
- Front end is equipped with axial installation threaded hole, convenient to position.
- Dual-direction taper locking, Repeated positioning precision can reach 0.01 mm



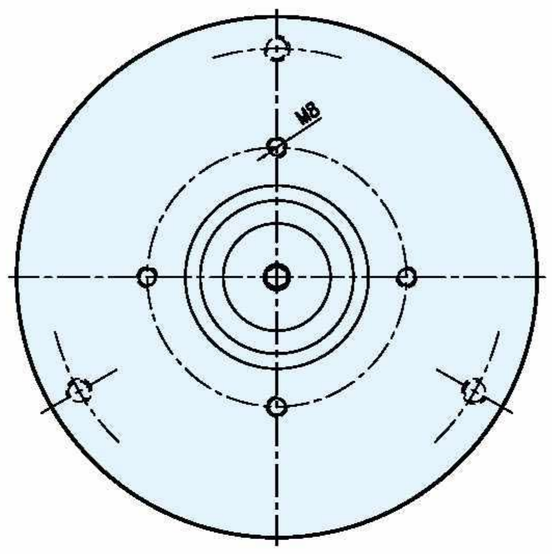

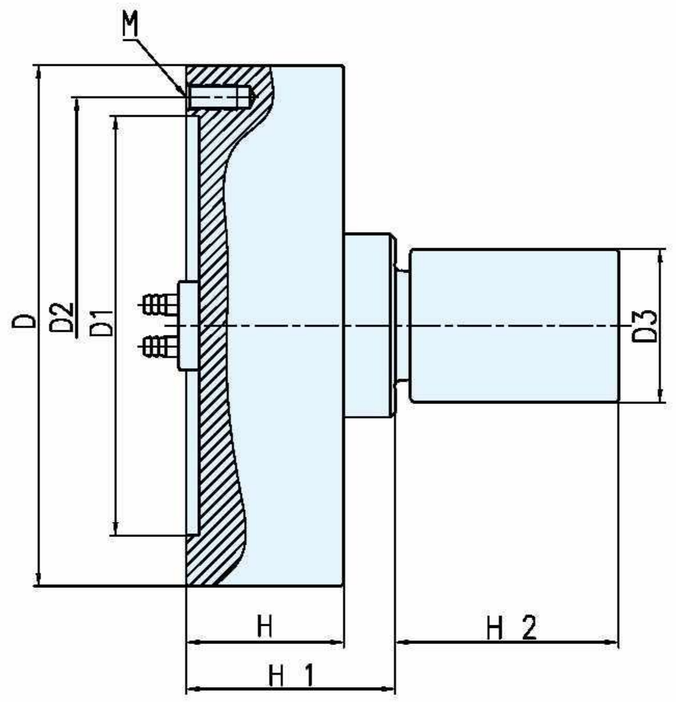

Performance parameters

	(r.p.m)	(KN.kgf)	Mpa	D3 (mm)	D	D1	D2	H	H1	H2	M
Spec.	Maximum speed (r.p.m)	Maximum clamping force (KN.kgf)	Allowable pressure Mpa	Clamping range (mm)							
KJZ130	3500	15/1530	0.4-0.8	φ10~φ30	φ135	φ95	φ108	60	80	-	3-M8
KJZ160	3500	25/2550	0.4-0.8	φ20~φ50	φ170	φ130	φ142	60	80	-	3-M8
KJZ200	3000	38/3876	0.4-0.8	φ20~φ70	φ210	φ165	φ180	62	82	-	3-M10
KJZ250	2500	65/6630	0.4-0.8	φ30~φ90	φ250	φ206	φ226	66	86	-	3-M12

Application scope

- Used to turn, mill, grind hollow parts
- Fixed spindle, high precision, high speed, large torque force
- When clamping, axial backward clamping is achieved through expanding-sleeve's axial movement.
- Expanding-sleeve is convenient to install and fast to replace.