PBL Universal Ball-Lock Power Chuck



Application
Castings or forgings can be O.D. or I.D. clamped

Technical features
Grips on taper up to 10°
Jaws pivot up to 5° to grip on uneven surfaces

Centralizing

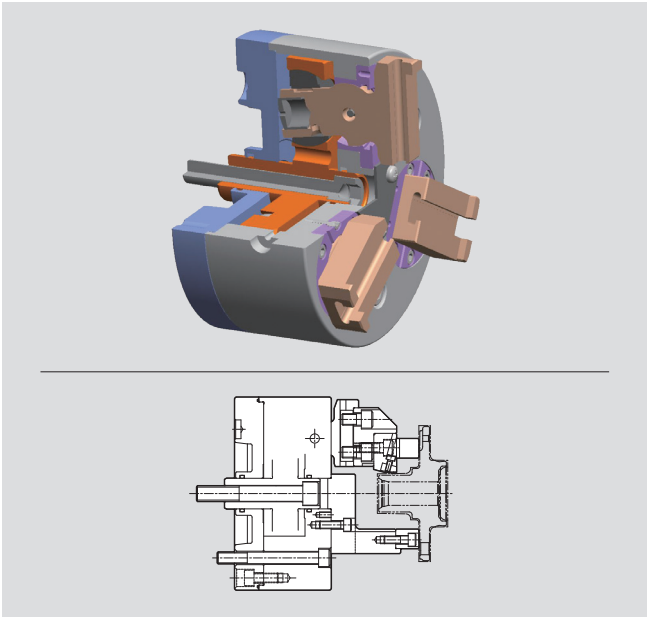

Compensating

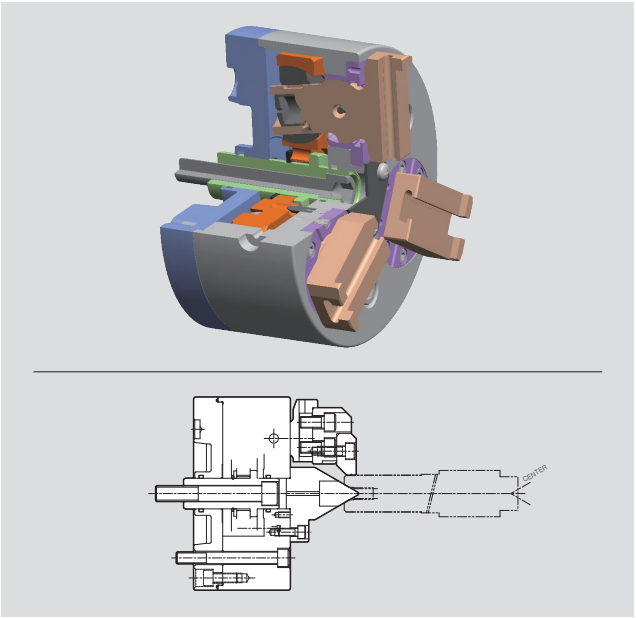

PBL Components

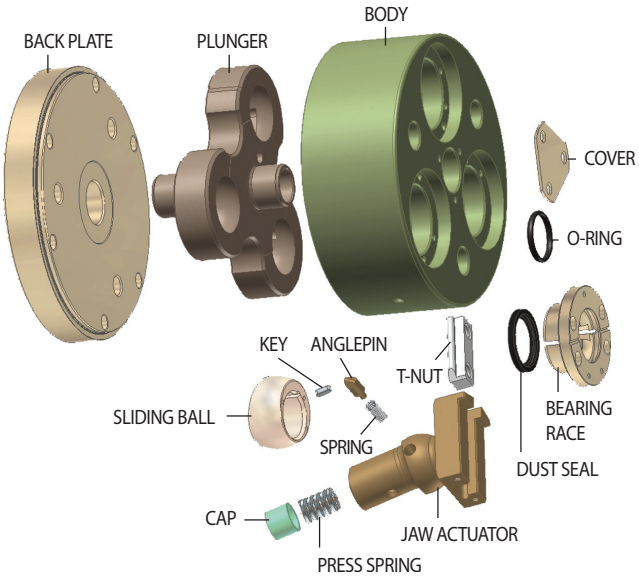

Inserts

Angle Lot Style			
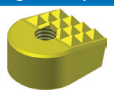	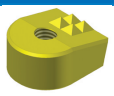	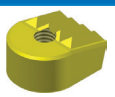	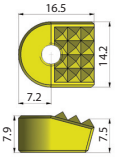
PC127-10SC	PC127-4SC	PC130-4SC	
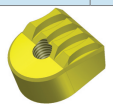	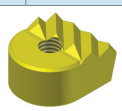		
PC132-4SC	PC145-5SC		
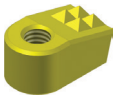	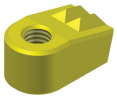		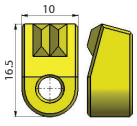
PC127-4SC-S	PC130-2SC-S		
Round Style			
			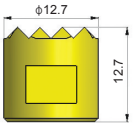
PC070-12SC	PC070-4SC		

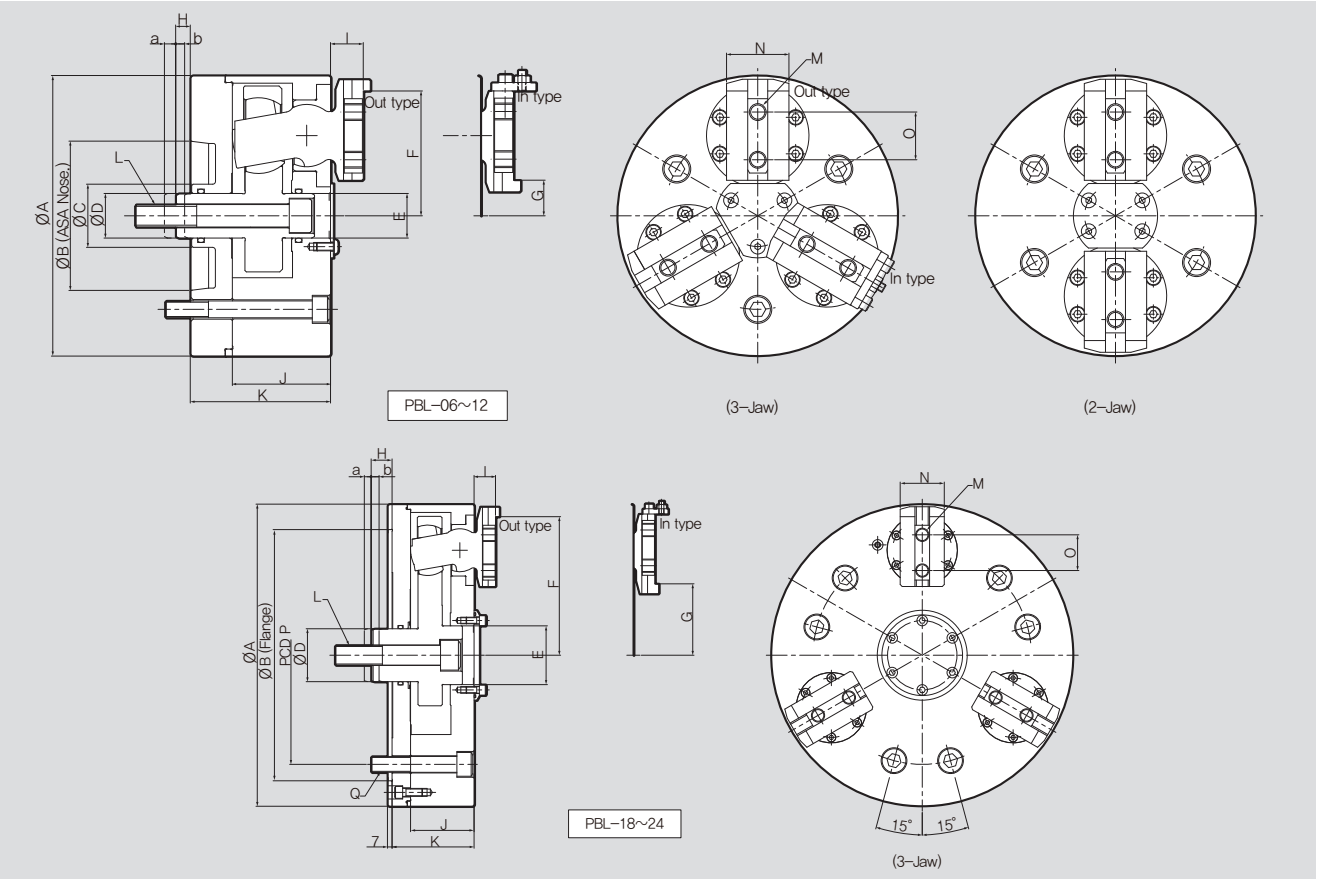

DIMENSIONS

	PBL-06	PBL-08	PBL-10	PBL-12	PBL-15	PBL-18	PBL-21	PBL-24
ØA	162	200	254	300	381	457	533	610
ØB	A2 #5, A2 #6	A2 #5, A2 #6, A2 #8	A2 #6, A2 #8	A2 #8, A2 #11	A2 #8, A2 #11	380	380	380
ØC	40	45	55	55	80	-	-	-
ØD	30.17	31.76	41.285	41.285	57.16	80	80	80
ØE	30.17	31.76	41.285	41.285	57.16	88.9	88.9	88.9
F	73.15	88.95	112.7	133.275	171.45	209.55	247.7	285.8
G	22.1	25.35	30.3	50. 87	69.8	107.9	146	184.2
H	10.6	10.4	13.5	13.5	24.7	31.7	31.7	31.7
a	5.1	8	8	8	10.3	10.3	10.3	10.3
b	6.2	6.4	9.5	9.5	12	12	12	12
I	19.3	23.3	29.1	29.1	32.4	32.4	32.4	32.4
J	59.2	70	86.6	86.6	96.1	96.1	96.1	96.1
K	84.2	100	118	118	131	124	124	124
L	M16	M16	M18	M18	M24	M30	M30	M30
M	M10	M12	M16	M16	M20	M20	M20	M20
N	38.1	44.45	57.15	57.15	66.68	66.68	66.68	66.68
O	29.5	34	44	44	54	54	54	54
P	-	-	-	-	-	330.2	330.2	330.2
Q	-	-	-	-	-	6-M24	6-M24	6-M24

SPECIFICATIONS

		PBL-06	PBL-08	PBL-10	PBL-12	PBL-15	PBL-18	PBL-21	PBL-24
Max. Clamping Force [kgf]		6,600	8,700	10,800	10,800	16,500	16,500	16,500	16,500
Max. Drawbar Pull [kgf]		2,200	2,900	3,600	3,600	5,500	5,500	5,500	5,500
Jaw Stroke Dia. [mm]		7.9	9.5	12.7	12.7	15.8	15.8	15.8	15.8
Plunger Stroke [mm]		11.3	14.3	17.5	17.5	22.3	22.3	22.3	22.3
Clamping Range	Outside Dia. [mm]	12.7~120	16~152	50~203	63~241	76~317	89~394	162~470	180~520
	Inside Dia. [mm]	70~152	76~203	85~235	127~305	165~381	241~457	317~533	350~600
Max. Speed [r.p.m]		4,000	3,500	2,500	2,000	1,800	1,500	1,000	1,000
Weight [kg]		18.0	27.0	45.0	67.5	84.5	120.0	180.0	290
GD2 [kgf·m^2]		0.15	0.48	1.23	2.42	8.49	15.17	25.00	25