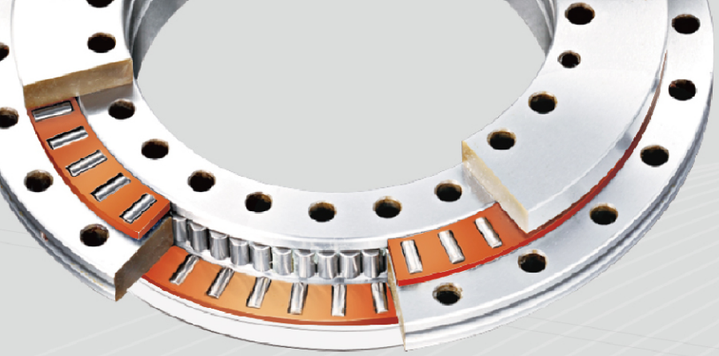



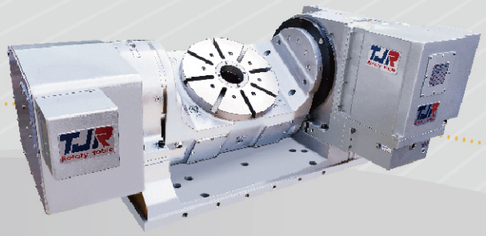

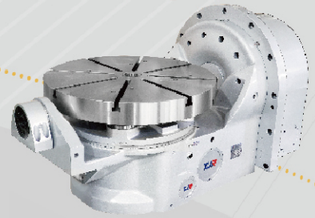

Rotary Table

Head Office/ Taiwan:

TJR Precision Technology Co., Ltd.

TEL: (886) 4-2562-1267
FAX: (886) 4-2562-1297 / (886) 4-2562-1198
Web: www.tjr.com.tw E-mail: tjr@tjr.com.tw
No.805, Zhongshan Rd., Shengang Dist.,
Taichung City 42943, Taiwan (R.O.C.)

Welcome to the download area of the website for E-catalog.

Jiangsu, Jin Tan Jia Precision Machinery Co., Ltd.

TEL: 0512-5781 8756
No. 19, JinYang East Road, LuJia Town, Kunshan City, Jiangsu, China, 215334

Shanghai Tan Jia Machinery Equipment Ltd.

TEL: (86) 21-6806-0545~6 FAX: (86) 21-6806-0547
E-mail: zhuhongmei129@163.com

TJR APP

We Chat

www.tjr.com.tw

2023-03 The 12th version TJR Precision Technology Co., Ltd. owns the related right of modification.

Cat. 2023-03 © Copyright reserved.

TJR®
Rotary Table

Exquisite Products of Taiwan.
Extreme Ingenuity

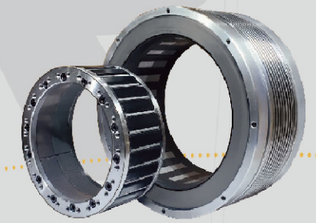

Driven by
D.D. Motor



Driven by
Alloy Steel Worm Gear

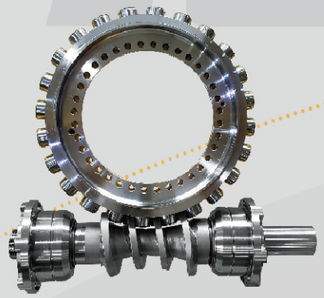

Driven by
Roller Gear Cam



TJR Precision Technology
www.tjr.com.tw The 12th Edition

No More wear and tear

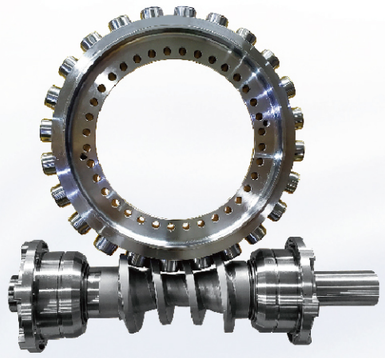

Driven by
Roller Gear Cam



Driven by
Alloy Steel Worm Gear

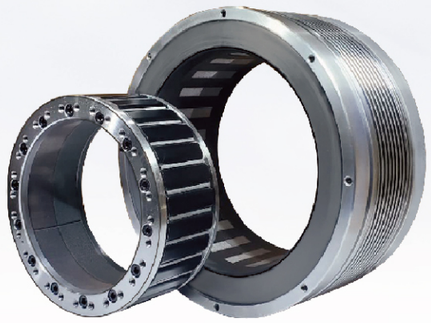

Driven by
Direct Drive Motor



FANUC-made Torque Motor
Perfect Match with Fanuc Control

TJR CNC Rotary Table
Exquisite Products of Taiwan. Extreme Ingenuity

There are **four common transmission mechanisms** of rotary table as bellow:
You can find all types of mechanism in TJR.

4 Transmission Mechanisms

A



Driven by alloy steel worm gear



Strength:
① Much more anti-wear than bronze worm gear
② High torque
③ Because the tilting axis needs to bear heavy load, alloy steel worm gear can significantly enhance wear resistance.

B



Driven by roller gear cam
(speed: 80 rpm)



Strength:
① Almost no backlash during the clockwise / anti-clockwise rotation
② Almost no abrasion for the transmission mechanism
③ High speed

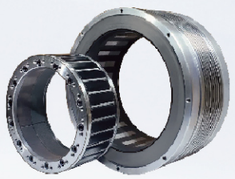

C-1

Driven by super high speed direct drive motor
(super high speed: 2000 rpm)

C-2

Driven by direct drive motor
(speed: 200 rpm)

Strength: **a mill / turn component**
①If the moving column vertical machining center or drilling & tapping center is equipped with our table, it can make the machine work as a horizontal or vertical lathe concurrently.
②The super high speed of rotary axis: 2000 rpm.
③Truly zero backlash during the clockwise / anti-clockwise rotation.
④Truly zero wear for the transmission mechanism.
⑤Long-lasting high precision
(The actual precision depends on the selected angle encoder)



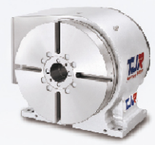



Strength:
① Truly zero backlash during the clockwise / anti-clockwise rotation.
② Truly zero wear for the transmission mechanism. (No abrasion at all)
③ High speed: 200 rpm
④ Long-lasting high precision
(The actual precision depends on the selected angle encoder)

D



Driven by Japan-made worm & worm gear



Strength:
① The major and cost-effective solution
② Easy to adjust backlash after some abrasions

Rigidity comparison between radial & axial bearing and taper roller bearing

Take Ø255mm Rotary Table as an example

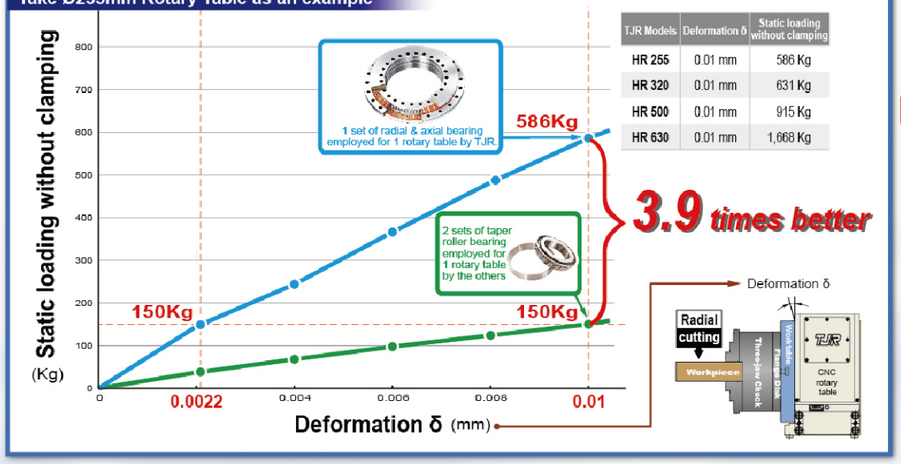

TJR Models	Deformation δ	Static loading without clamping
HR 255	0.01 mm	586 Kg
HR 320	0.01 mm	631 Kg
HR 500	0.01 mm	915 Kg
HR 630	0.01 mm	1,668 Kg



Large diameter

Devised by German

Specialized for Rotary Table, the **Radial & Axial bearing** can fully support heavy-duty cutting in both radial and axial directions.



Japan-made high-tensile-brass worm gear

Wear life is 2.6 times longer than aluminum bronze PBC3.

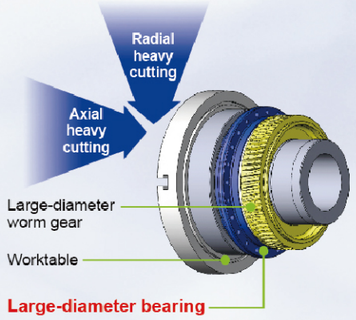

can sustain outer circle periphery of table, and accordingly **deliver high rigidity** and **optimize axial heavy-duty cutting.**

Example of High-Tensile-Brass worm gear model name

- AR-170-J
- HR-255-J
- FHR-320-J
- FHR-400CF-J

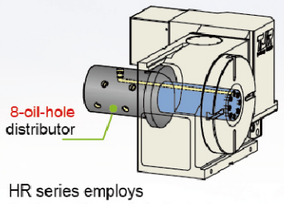

HR series employs the **large-through-hole** design, as it sizes up to over Ø255mm. The through hole diameter can be adjusted by using the mandrel sleeve. But, it is no way to be enlarged with small-through-hole design.

High performance braking system

TJR Drum brake	Others Disc brake
1) Clamping range is bigger	1) Clamping range is smaller
2) Drum brake mechanism is tightly placed on the worktable and thus provides high rigidity	2) Disc brake mechanism is far from the worktable; therefore, it causes run-out of table and low rigidity
So it is suitable for heavy duty cutting	Available for light cutting only

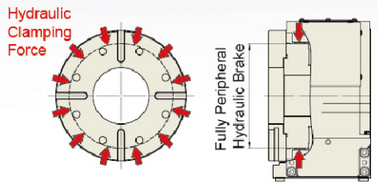

Drawing of drum clamping mechanism

TJR CNC Rotary Table
Exquisite Products of Taiwan. Extreme Ingenuity

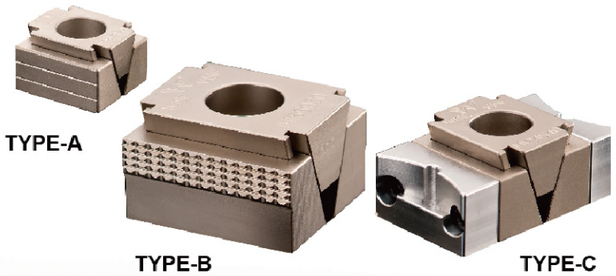

Little King Kong Vise

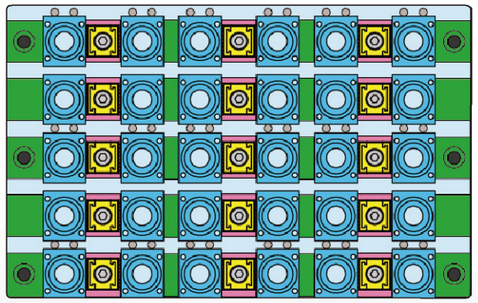

▶ Little King Kong Vise
An example of fixing round work-piece.

- Blue: Work-piece
- Yellow: Little King Kong Vise
- Green:Work-holding fixture
- Pink: Vise directional fixture

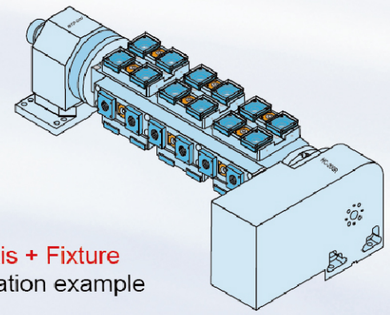

▶ The 4th axis + Fixture
An application example

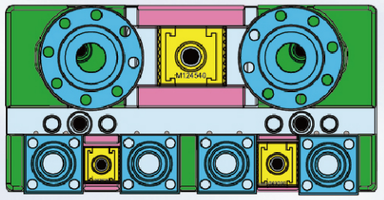

▶ Zero point clamping system is available. High-precision exchange of clamping devices, fixtures and work-pieces within seconds.

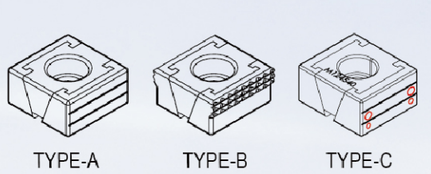

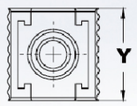

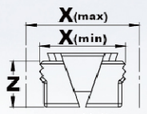

Unit : mm

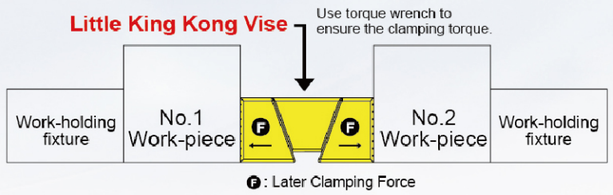

Vise specification

Model	Vise dimension X (mm) Min.	X (mm) Rated	X (mm) Max.	Y (mm)	Z (mm)	Suitable Screw	Ⓕ Clamping Force (KN)	Surface Hardness (HRC)
M062525	23	25	26	25	12	M6*16	18	48-52
M083030	27	30	31	30	15	M8*20	25	48-52
M104040	36	40	42	40	20	M10*25	45	48-52
M124540	40	45	47	40	22	M12*30	65	48-52
M166060	54	60	63	60	29	M16*40	110	48-52

Zero point clamping system is the modern alternative to the conventional T-slot table: Drastically reduces the setup times and increases your machine capacity.

Make your own work-holding fixture by easily employing TJR Vise and TJR zero point clamping system on the fixture plate of 4th axis or the faceplate of 4th & 5th axes.
Holes on the zero point clamping system are used as sockets for clamping studs.

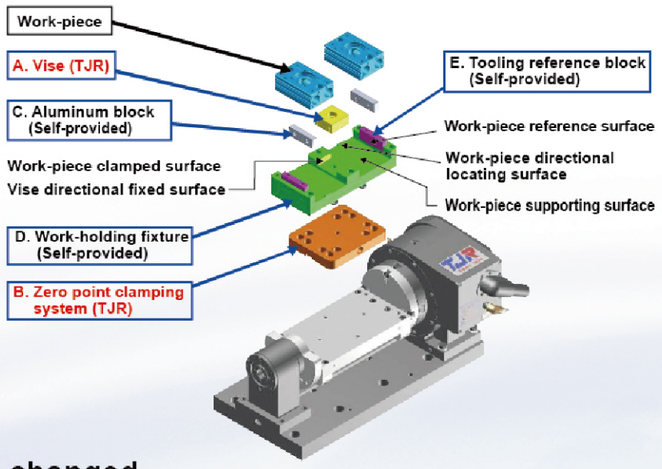

Work-holding fixture can be changed quickly and accurately (across all machines).

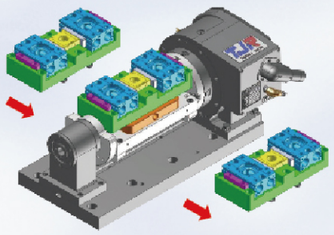

The illustration of the applicaton for the 4th axis + connection plate

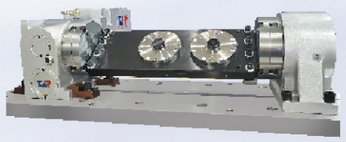

The zero point clamping system on the connection plate

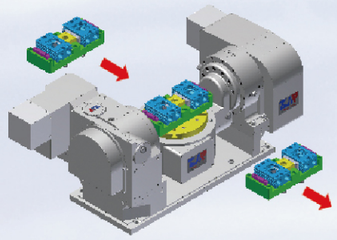

The illustration of the application for the zero point clamping system on the faceplate of the 4th & 5th axes

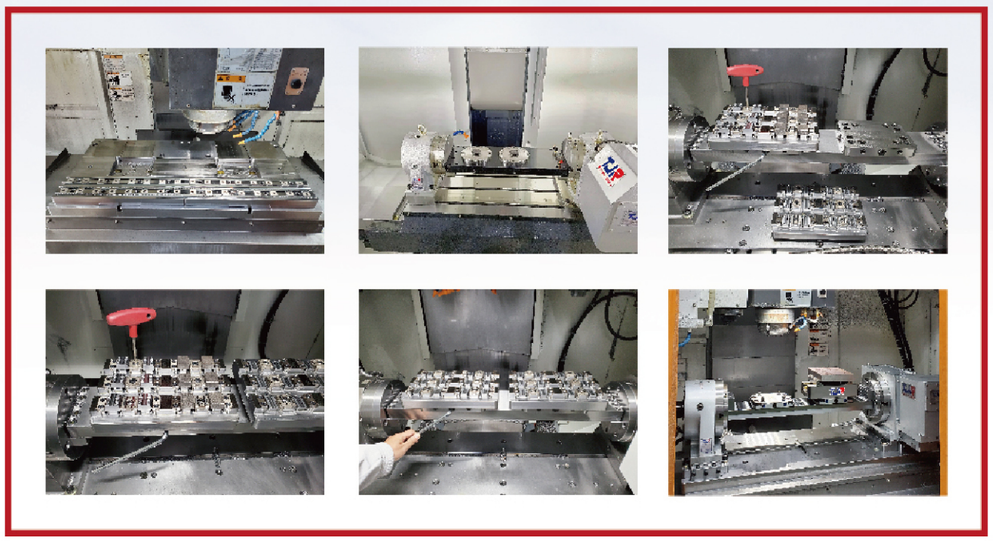

TJR CNC Rotary Table
Exquisite Products of Taiwan. Extreme Ingenuity

A built-in zero point clamping system on the faceplate of tilting rotary table.

Patented products, imitation is prohibited

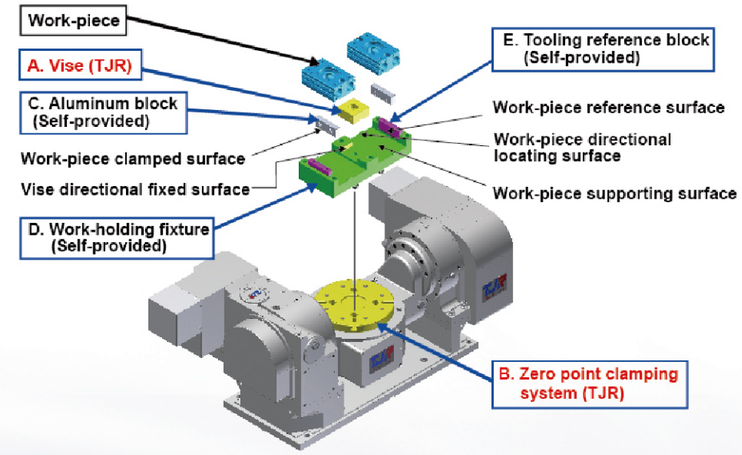

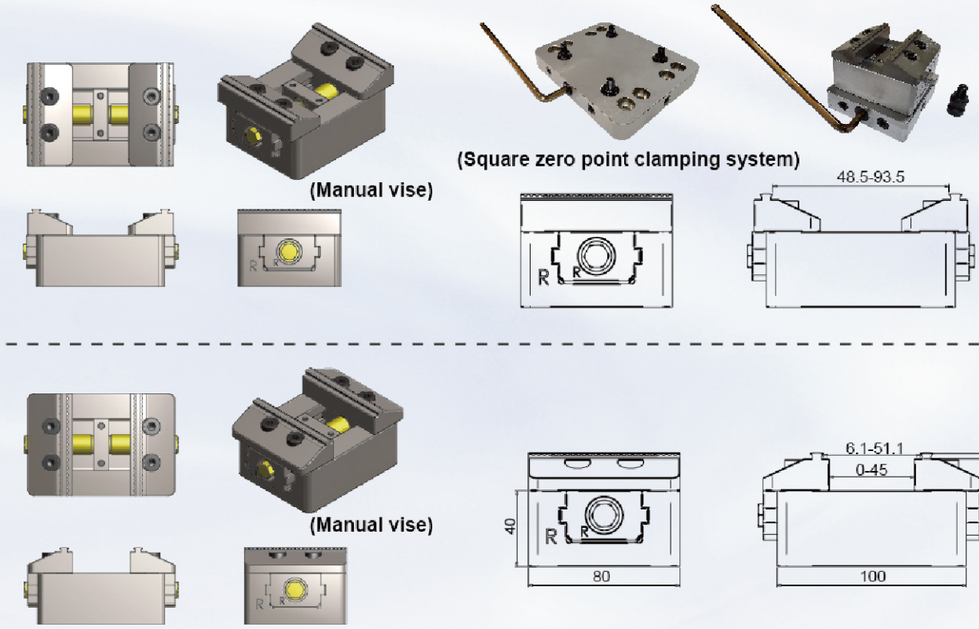

The faceplate of rotary table is concurrently the zero point clamping system.

(Patented products, imitation is prohibited)

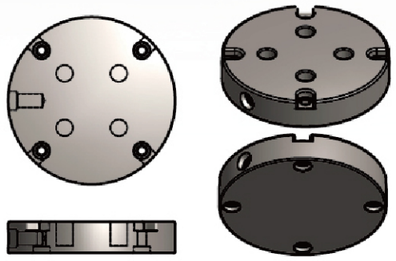

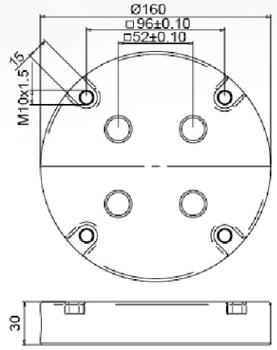

Description	Model code		Page
	Features of TJR rotary tables		1～3
	Little King Kong Vise		4
	Zero point clamping system		5～6
	Page index		7～8
Instruction	How to choose a suitable TJR rotary table		9～10
CNC Rotary Tables Min indexing angle – 0.001° Driven by worm & worm gear		AR series: Pneumatic brake(right side motor) AR-125R、AR-170R AR-210R、AR-250R、AR-255H	11～12
		AR series: Pneumatic brake(left side motor) AR-125L、AR-170L AR-210L、AR-250L	13～14
		AR series: Pneumatic brake(back side motor) AR-125B、AR-170B AR-210B、AR-250B	15～16
		HR series: Hydraulic brake HR-255、HR-320、HR-400、AR-210H HR-500、HR-630、HR-800	17～19
		HR-320B、HR-320B-2W、HR-400B	21～22
Manual Tilting Rotary Tables (CNC Rotary axis)		MTHR series: Maual Tilt axis CNC Rotary axis MTHR-255	20
CNC Multi spindle Rotary Tables Min indexing angle – 0.001°		AR multi spindle series:Pneumatic brake (2W：2-wheel coupled) AR-125-2W/170-2W/210-2W (3W：3-wheel coupled) AR-125-3W/170-3W/210-3W (4W：4-wheel coupled) AR-125-4W	23～24
CNC Index Tables Min. indexing angle – 1° or 5°		HI series: Hirth coupling hydraulic brake Fixed angle (1° or 5°) HI-255、HI-320、HI-400、HI-500	25～26
CNC Indexing tables (Horizontal only) Min indexing angle - 1°or 5°		HHI series: Hirth coupling hydraulic brake(1° or 5°) HHI-320/400/500/630/800/1000 HHR series: Hydraulic brake(0.001°) HHR-400/500	27～28
Non-CNC Hydraulic index tables with hirth coupling		HC series: Hirth coupling hydraulic brake Fixed angle / Equal-parts HC-255A、HC-320A、HHC-500 (Index numbers: 2, 4, 8, 12, 24 indexes)	29
Flat type APC for 3-axis-moving-column vertical machining center	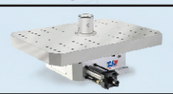	CHC series: Flat type auto pallet changer (180° to and fro) CHC-700 x 910、CHC-700 x 1090	30
CNC Tilting Rotary Tables Min. indexing angle –0.001° Driven by worm & worm gear (Dual-arm type)		FAR series: Pneumatic brake FAR-125/125B、FAR-170/170A/170B	31～32
		FAR series: Pneumatic brake FAR-210/210B	33～34
		FHR series:Hydraulic brake FHR-255C/255CL、FHR-320/320C FHR-400CF/400C-540-HR400B FHR-401C-700(800)-HR400B FHR-500C/65 0C	35～40
(Single-arm type)		FAR series: Pneumatic brake FAR-100SN/FAR-160SN	40
		FHR series: Hydraulic brake FHR-400S FHR-650S-525/650S-550	41～42
Roller Gear Cam Hook type APC for vertical machining center		CURC series: Hook type auto pallet changer (180° to and fro) CURC-500x700	43

TJR CNC Rotary Table
Exquisite Products of Taiwan. Extreme Ingenuity

Description	Model code			Page
Hook type APC for vertical machining center		CTU series: Hook type auto pallet changer (180° to and fro) CTU-400 x 600、CTU-500 x 700		44
Tray type APC and dual pallets rotary table for horizontal machining center		CHI series: Hirth coupling hydraulic brake CHI-400/500/630L (1° or 5°) CHR series: Hydraulic brake CHR-400/500/630L (0.001°) CTH series: Tray type auto pallet changer CTH-400/500/630 (180° to and fro)		45～50
CNC Rotary Tables Min indexing angle – 0.001° Driven by Roller Gear Cam (4th axis)	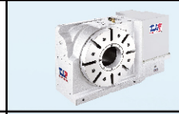	RC series：Pneumatic brake/Hydraulic brake RC-170R/210R/255R(N) RC-320R(N)/320L		51～52
(4th & 5th axes)	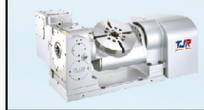	FAR series：Pneumatic brake/Hydraulic brake FAR-160SN-RC255、FAR-160-RC255、 FAR-170A-RC210、FAR-170-RC210、FAR-210-RC210		53～54
		FAR-170-2W-RC255、FAR-210-2W-RC255		57～58
		FHR series：Hydraulic brake FHR-255C-RC255、FHR-255CL-RC255 FHR-320-RC320、FHR-320C-RC320 FRC series：Hydraulic brake FRC-320CF-RC320、FRC-255CL-RC320		55～56
		FHR series：Hydraulic brake FHR-400CF-RC400F FHR-350F-2W-RC320-2A HRC/HHRs series：Hydraulic brake HRC-400SP		57～58
CNC Rotary Tables Min indexing angle – 0.001° Driven by Direct Drive Motor (4th axis)	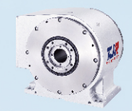	AD series：Pneumatic brake	AD-170、AD-210、AD-260iB	59～60
			AD-250HS	63～64
		HAD series：Pneumatic brake	HAD170/210F/250F	59～60
(4th & 5th axes)		FAD series：Pneumatic brake	FAD-170F-RC210 FAD-210F-RC210	61～62
			FAD-300F-HS/400HS-AD500i-420 FAD-500FHS-AD500i-480	63～64
		FHD series：Hydraulic brake / Two D.D. Motors FHD-650-iD650 iHHD series：Hydraulic Brake iHHD-650		61～62
Support table	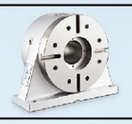	RTA series:Pneumatic brake RTA-125/170/210 RTH series:Hydraulic brake RTH-255/320/400A		65
		RT series: Support table without brake RT-135 / RT-170F		60/66
Manual tailstock		TJ series: Fixed Taper TJ-125～400 TTJ series: Replaceable Taper TTJ-125～400		66
Manual tailstock with Pneumatic / Hydraulic Switching valve		ATJ / ATTJ series: With pneumatic switching valve HTJ / HTTJ series: With hydraulic switching valve		
Rotary table accessories / Accuracy Inspection report: Geometry precision test/ indexing precision test				67~73
Global Sales				74

TJR CNC Rotary Table
Exquisite Products of Taiwan. Extreme Ingenuity

Instruction

How to choose a suitable TJR rotary table

1 Workpiece material :

A : For materials like aluminum and copper, it is OK to select AR series (Pneumatic brake)
B : For materials like cast iron and steel, it is OK to select HR series (Hydraulic brake) or HI series (Hirth coupling Hydraulic brake)

2 Workpiece accuracy requirement :

A : For accuracy within 20 sec, select AR series (as rotary table for any angle)
B : For accuracy within 15 sec, select HR series (as rotary table for any angle)
C : For accuracy within 10 sec, the retrofitting of angle encoder can be considered; but the angle encoder costs more. If the processing only occurs at fixed angles, HI series (±5 sec can be achieved) can be considered; however, the HI series cannot be used for continuous cutting, as it only works at fixed angles of multiple of 1° or 5° (see page 25)

3 Workpiece shape and size :

A : If it is in the shape of round bar, please purchase the 3-jaw chuck and the center tailstock additionally. (as Dia.① to the right) When choosing the 3-jaw chuck, note that its outer diameter should not exceed the table diameter. Please see page 68 for the grip range of the chuck.
B : If of odd shapes and more than two workpieces are processed at once (see page 67), then purchase support table additionally. (as Dia.② to the right) [For L-block, base plate and middle plate (connection plates), please have them manufactured by fixture suppliers].
※ When using middle plate, please note to limit its width to the max. table diameter.

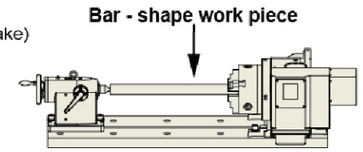

▲ Drawing ①

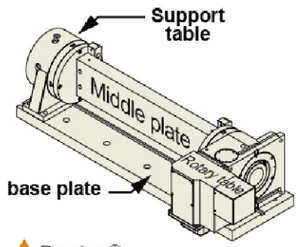

▲ Drawing ②

4 Max. load :

Verify if the rotary table can withstand the load of workpiece and then add up the weights of predetermined rotary table, tailstock, L-block, middle plate, base plate, workpiece and fixture to see if the total load which the machine can withstand is exceeded. If overweighed, check the material of workpiece first. If the material is aluminum alloy or other light material but you are forced to select a larger rotary table due to its too long details in shapes which require over-large radius of rotation, please feel reassured to select the rotary table of a next smaller size. Fit raiser blocks to lift the workpiece so as to accommodate the radius of rotation whereby to reduce the total weight and the cost.

5 Y axis interference :

First, verify whether the selected rotary table interferes when it is placed on the work table of the machining center. With the Y axis of the vertical machining center moved to the origin, please measure
A : the distance between central groove of the worktable and the sheet metal of the machine's slide door [Ex: assuming 450mm remains]
B : the distance between the centerline of rotary table and the end of motor cover (excluding the wiring box) [Ex: 420mm in HR255-R as Dia ③ to the right]
If the "B" distance is less than the "A" distance, it is certain that the rotary table will not collide with the sheet metal of the slide door. [Ex: 420mm < 450mm; thus it's ok to select HR255-R] If not, please change to sheet metal cover reduction version of TJR rotary table. [Ex: only 346mm in HR255-N as Dia ③-1 to the right]

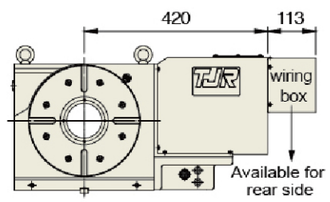

▲ Drawing ③ : HR-255R

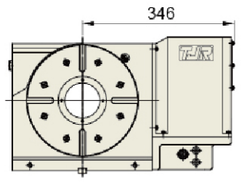

▲ Drawing ③-1 : HR-255N

6 Verify the available room for placing the workpiece :

Please measure the length of working table of the machine to verify that it is not 200 mm smaller than base plate. It is the maximal allowed protrusion for the base plate of all models to stand out by 100mm on each side of the working table. For example: Assuming the length of working table of the machine is 950mm. (as Dia. ④ to the right) If HR255-N rotary table, RTH-255 support table, and middle plate are selected, then it is determined that 700 mm in "E" middle plate is available for workpiece. (see data sheet on page 67) By the same principle, it's 1148mm in "B" base plate. In this case, it's acceptable since it is only 198 mm larger than machine's working-table. As for the space "E", thickness "J" and width "H" , they are advised not to exceed the set values in our specification (as data sheet on page 67).

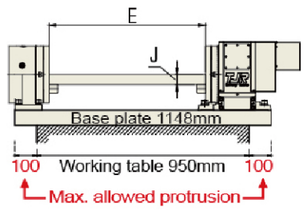

▲ Drawing ④ :
base is bigger than working table

7 Important notices :

When purchasing rotary table, support table, and cradle-type fixture (as Dia. ⑤ to the right), it is necessary to advise us if the arm (A) has overtaken the table radius and caused off-center process. Otherwise, the worm wheel will be worn out quickly. (The longer the arm (A) is, the more it's against common sense and normal practice) We shall not be responsible if you fail to advise so.

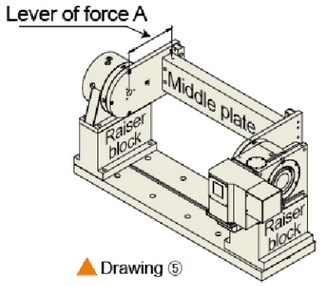

▲ Drawing ⑤

8 "Reserved interface for the forth axis" :

The so-called "reserved interface for the forth axis" refers to all the small hardware or PLC software necessarily reserved for the fourth axis on the machine as well as refers to five main components including ① rotary table ② 4th axis motor ③ shielded power & feedback cables ④ unshielded power & feedback cables, and ⑤ 4th axis amplifier. (as below Dia. ⑥ shows)
(A) If the machine comes with those reserved interfaces for the fourth axis, there is no problem at all to retrofit the fourth axis of the same system for four-axes simultaneous contouring.
(B) If the machine does not come with those reserved interfaces for the fourth axis, the single-axis controller (SAC) we provide (as below Dia. ⑦ shows) can be used to retrofit the fourth axis. However, such single-axis controller does not interlock with any of X, Y and Z axes in the machine. In other words, the other three axes can not be moved unless the fourth-axis motion is complete.

9 Application for single axis controller (SAC) :

▼ Drawing ⑦

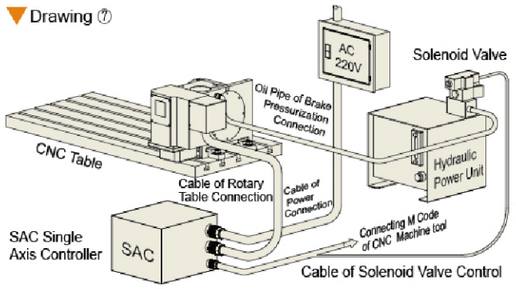

★ With a reserved M Code in the machine center, TJR SAC single axis controller or AIC hydraulic controller can be easily installed, no matter which brand of control system is used.

▼ Drawing ⑥ 5 main components of the 4th axis

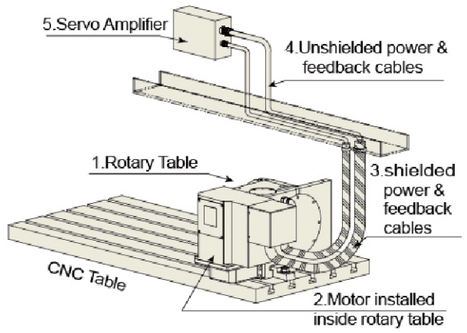

10 Application of AIC hydraulic controller :

It is not suitable for CNC rotary table, but for HC series hydraulic index table only(see page 29)

Strength:	• Indexing accuracy ±5 seconds, • Lower cost due to no numerical control system
Weakness:	• It is not available for simultaneous movement with the other 3 axes. • Limited index numbers: 2, 4, 8, 12, 24 index numbers
Note:	Please prepare specialized PLC for HC series by yourself, if you don't buy AIC hydraulic controller.

▼ Drawing ⑧

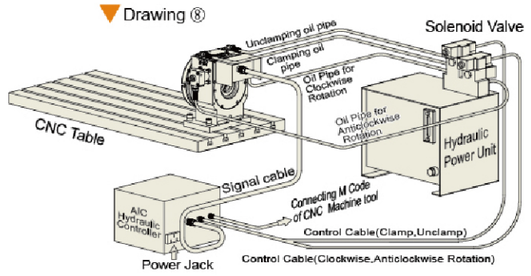

CNC Rotary Tables
(Min indexing angle – 0.001°)

Driven by Worm & Worm Gear

AR Series

(Powerful Pneumatic Brake)-

Right Side Motor

AR(s)-125R/170R/210R/250R/255H



▲ AR(s)-125R

FEATURE

Use radial & axial bearings





◀ Alloy steel worm gear (Optional)

Vertical Horizontal



▲ AR(s)-170R



▲ AR(s)-210R



▲ AR(s)-250R



▲ AR(s)-255HR

Hydraulic AR(s)-170HR/210HR/250HR are alternatives.

Item / Model		Unit	AR(s)-125R	AR(s)-170R	AR(s)-210R / AR(s)-250R	AR(s)-255HR
Table Diameter		mm	Ø 125	Ø 170	Ø 210 / Ø 250	Ø255
Diameter of Table Central Hole		mm	Ø 35H7	Ø 67	Ø 67	Ø110
Inner Diameter of Mandrel Sleeve		mm	-	Ø 40H7	Ø 40H7	Ø80H7
Diameter of Center Through Hole		mm	Ø 25	Ø 40	Ø 40	Ø80
Center Height (Vertical)		mm	110	135	160	160
Table Height (Horizontal)		mm	152	152	152 / 160	200
Table T-slot Width		mm	12H7	12H7	12H7	12H7
Guide Block Width		mm	14h7	18h7	18h7	18h7
Min. Increment		deg.	0.001	0.001	0.001	0.001
Indexing Precision		sec.	40	20	20	15
Repeatability		sec.	6	6	6	6
Clamping System (Pneumatic)		kgf/cm^2	6	6	6	5
Clamping Torque		kgf·m	13	31	31	70
Servo Motor Model	FANUC	Taper shaft	αis4 / βis4	αiF4 / αiF8 / βis8	αiF4 / αiF8 / βis8	αiF8 / βis8
	MITSUBISHI	Taper / Straight shaft	HG/HF-75 / 105	HG/HF-54 / 104	HG/HF-54 / 104	HG/HF-104 / 154
Speed Reduction Ratio		-	1 : 60	1 : 90	1 : 90	1 : 120
Max. Rotation Rate of Table (Calculate with Fanuc α Motor)		r.p.m	83.3 *(33.3)	44.4 *(33.3)	44.4 *(33.3)	33.3 *(25)
Allowable Inertia Load Capacity (Horizontal)		$kg.cm.sec^2$	2	5.4	8.3 / 11.7	20.3
Allowable Workpiece Load	Vertical	kg	50	75	75	100
	with Tailstock	kg	100	150	150	250
	Horizontal	kg	100	150	150	250
Allowable Thrust Load (with Rotary Table Clamping)	F	kgf	1000	1450	1450	2000
	FxL	kgf·m	45	110	110	150
	FxL	kgf·m	13	31	31	70
Driving Torque		kgf·m	9 *(3.7)	18 *(14.6)	18 *(14.6)	55 *(19.6)
Net Weight (servo motor excluded)		kg	34	50	55 / 58	116

*( ) Alloy Steel worm & gear series

TJR CNC Rotary Table

NEW Powerful Brake System

AR(s)-125R

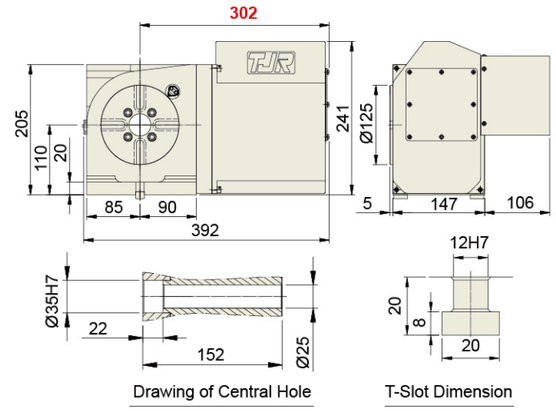

Drawing of Central Hole

T-Slot Dimension

NEW Powerful Brake System

AR(s)-170R AR(s)-170HR (Hydraulic Brake)

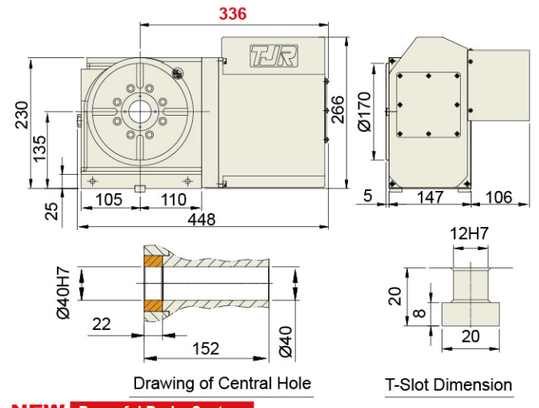

Drawing of Central Hole

T-Slot Dimension

NEW Powerful Brake System

AR(s)-210R/250R AR(s)-210HR/250HR (Hydraulic Brake)

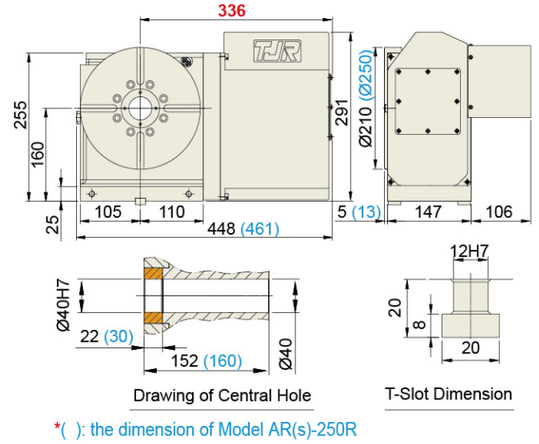

Drawing of Central Hole

T-Slot Dimension

*( ): the dimension of Model AR(s)-250R

ARs-210H-R-J-A Diagram of Model Encoding Rules

- Special Version (A, B, C...) Specified by Customers
- J: Worm and Worm Gear Made in Japan (Recommend for any table which sizes up to over Ø255mm)
- T: Worm and Worm Gear Made in Taiwan
- R: Right Side Motor (for Both Vertical and Horizontal Applications)
- L: Left side motor, while applying to 4th axis. (for Both Vertical and Horizontal Applications)
- L: Extended type, while applying to 4th & 5th axis
- L: Integrated linear guideway bottom type, while applying to auto pallet changer.
- B: Back Side Motor (Only for Vertical Application ;not able to equip with angle encoder)
- N: Right Side Motor with Sheet Metal Cover Reduction (Only for Vertical Application)
- C: Dual-axis Cradle Type
- S: Dual-axis Single-arm Type
- A: 2nd generation
- H: Hydraulic Brake
- Table Diameter
- Alloy steel worm gear
- **Model code** (refer to page 7 ~ 8)

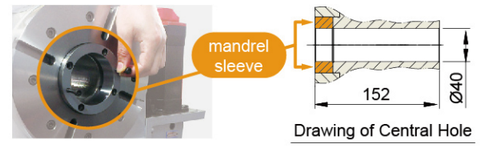

Drawing of Central Hole

NEW Powerful Brake System

AR(s)-255HR

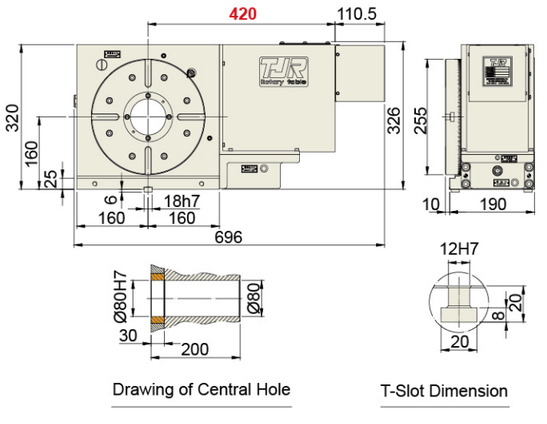

Drawing of Central Hole

T-Slot Dimension

Driven by Worm & Worm Gear

CNC Rotary Tables
(Min indexing angle – 0.001°)

Driven by Worm & Worm Gear

AR Series

(Powerful Pneumatic Brake)-

Left Side Motor

AR(s)-125L/170L/210L/250L







▲ AR(s)-125L

◀ Alloy steel worm gear (Optional)



Use radial & axial bearings



AR(s)-170L ▲



AR(s)-210L ▲



AR(s)-250L ▲

Hydraulic AR(s)-170HL/210HL/250HL are alternatives.

Item / Model		Unit	AR(s)-125L	AR(s)-170L	AR(s)-210L	AR(s)-250L
Table Diameter		mm	Ø 125	Ø 170	Ø 210	Ø 250
Diameter of Table Central Hole		mm	Ø 35H7	Ø 67	Ø 67	Ø 67
Inner Diameter of Mandrel Sleeve		mm	-	Ø 40H7	Ø 40H7	Ø 40H7
Diameter of Center Through Hole		mm	Ø 25	Ø 40	Ø 40	Ø 40
Center Height (Vertical)		mm	110	135	160	160
Table Height (Horizontal)		mm	152	152	152	160
Table T-slot Width		mm	12H7	12H7	12H7	12H7
Guide Block Width		mm	14h7	18h7	18h7	18h7
Min. Increment		deg.	0.001	0.001	0.001	0.001
Indexing Precision		sec.	40	20	20	20
Repeatability		sec.	6	6	6	6
Clamping System (Pneumatic)		kgf/cm^2	6	6	6	6
Clamping Torque		kgf·m	13	31	31	31
Servo Motor Model	FANUC	Taper shaft	αis4 / βis4	αiF4 / αiF8 / βis8	αiF4 / αiF8 / βis8	αiF4 / αiF8 / βis8
	MITSUBISHI	Taper / Straight shaft	HG/HF-75 / 105	HG/HF-54 / 104	HG/HF-54 / 104	HG/HF-54 / 104
Speed Reduction Ratio		-	1 : 60	1 : 90	1 : 90	1 : 90
Max. Rotation Rate of Table (Calculate with Fanuc α Motor)		r.p.m	83.3 *(33.3)	44.4 *(33.3)	44.4 *(33.3)	44.4 *(33.3)
Allowable Inertia Load Capacity (Horizontal)		$kg.cm.sec^2$	2	5.4	8.3	11.7
Allowable Workpiece Load	Vertical	kg	50	75	75	75
	with Tailstock	kg	100	150	150	150
	Horizontal	kg	100	150	150	150
Allowable Thrust Load (with Rotary Table Clamping)	F	kgf	1000	1450	1450	1450
	FxL	kgf·m	45	110	110	110
	FxL	kgf·m	13	31	31	31
Driving Torque		kgf·m	9 *(3.7)	29 *(14.6)	29 *(14.6)	29 *(14.6)
Net Weight (servo motor excluded)		kg	34	50	55	58

*( ) Alloy Steel worm & gear series

TJR CNC Rotary Table

Driven by Worm & Worm Gear

NEW Powerful Brake System

AR(s)-125L

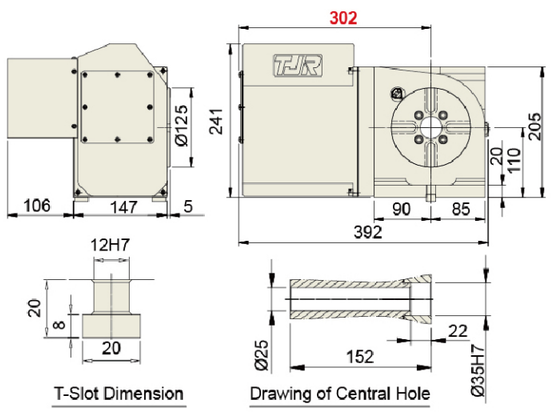

NEW Powerful Brake System

AR(s)-170L AR(s)-170HL (Hydraulic Brake)

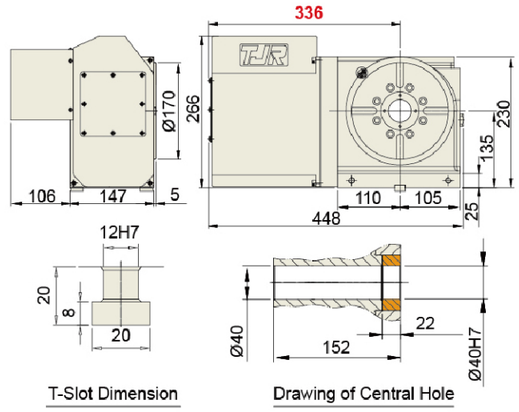

NEW Powerful Brake System

AR(s)-210L AR(s)-210HL (Hydraulic Brake)

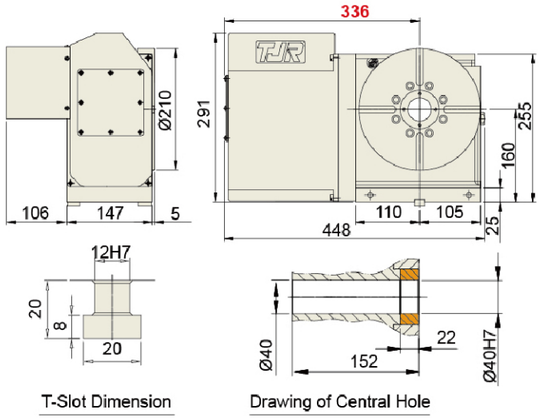

NEW Powerful Brake System

AR(s)-250L AR(s)-250HL (Hydraulic Brake)

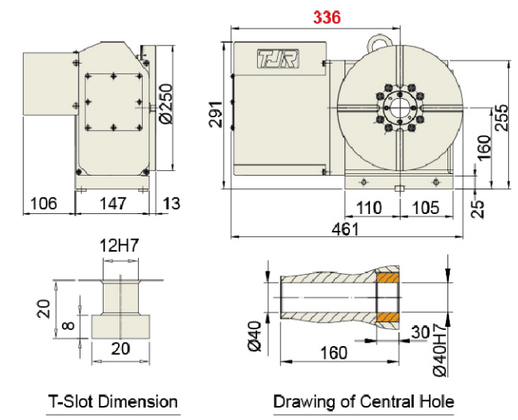

※ While using AR series rotary table (pneumatic brake), please note the following matters :



Air pressure required



F.R.L unit
(economic option)

or



Cooling dryer
(luxurious option)
(Self-provided)

Solenoid valve
(inside of rotary table)

scenario 1



or

Solenoid valve
(inside of rotary table)

scenario 2



Simultaneously brake for rotary table and tailstock

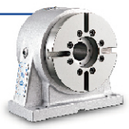

Note:
Please mount cooling dryer or F.R.L unit to avoid any rustiness which seizes up the shaft of solenoid valve and damages the coils.

CNC Rotary Tables
(Min indexing angle – 0.001°)

Driven by Worm & Worm Gear

AR Series

(Powerful Pneumatic Brake)-

Back Side Motor

AR(s)-125B/170B/210B/250B

C Vertical

For tapping center (short Y axis travel)

FEATURE



◀ Alloy steel worm gear (Optional)

Use radial & axial bearings



AR(s)-170B ▲
(Back Side Motor)

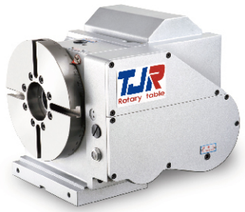

▲AR(s)-210B
(Back Side Motor)



◀ Picture of Power and Feedback Cable Connectors

(Back Side Motor type can not be equipped with angle encoder)

Hydraulic AR(s)-170HB/210HB/250HB are alternatives.

Item / Model		Unit	AR(s)-125B	AR(s)-170B	AR(s)-210B	AR(s)-250B
Table Diameter		mm	Ø 125	Ø 170	Ø 210	Ø 250
Diameter of Table Central Hole		mm	Ø 35H7	Ø 67	Ø 67	Ø 67
Inner Diameter of Mandrel Sleeve		mm	-	Ø 40H7	Ø 40H7	Ø 40H7
Diameter of Center Through Hole		mm	Ø 25	Ø 40	Ø 40	Ø 40
Center Height (Vertical)		mm	110	135	160	160
Table Height (Horizontal)		mm	-	-	-	-
Table T-slot Width		mm	12H7	12H7	12H7	12H7
Guide Block Width		mm	14h7	18h7	18h7	18h7
Min. Increment		deg.	0.001	0.001	0.001	0.001
Indexing Precision		sec.	40	20	20	20
Repeatability		sec.	6	6	6	6
Clamping System (Pneumatic)		kgf/cm^2	6	6	6	6
Clamping Torque		kgf·m	13	31	31	31
Servo Motor Model	FANUC	Taper shaft	αis4 / ßis4	αiF4 / αiF8 / ßis8	αiF4 / αiF8 / ßis8	αiF4 / αiF8 / ßis8
	MITSUBISHI	Taper / Straight shaft	HG/HF-75 / 105	HG/HF-54 / 104	HG/HF-54 / 104	HG/HF-54 / 104
Speed Reduction Ratio		-	1 : 60	1 : 90	1 : 90	1 : 90
Max. Rotation Rate of Table (Calculate with Fanuc α Motor)		r.p.m	83.3 *(33.3)	44.4 *(33.3)	44.4 *(33.3)	44.4 *(33.3)
Allowable Inertia Load Capacity (Horizontal)		$kg.cm.sec^2$	2	2.7	4.1	5.9
Allowable Workpiece Load	Vertical	kg	50	75	75	75
	with Tailstock	kg	100	150	150	150
	Horizontal	kg	-	-	-	-
Allowable Thrust Load (with Rotary Table Clamping)	F	kgf	1000	1450	1450	1450
	FxL	kgf·m	45	110	110	110
	FxL	kgf·m	13	31	31	31
Driving Torque		kgf·m	9 *(3.7)	18 *(14.6)	18 *(14.6)	18 *(14.6)
Net Weight (servo motor excluded)		kg	-	60	65	72

*( ) Alloy Steel worm & gear series

Driven by Worm & Worm Gear

NEW Powerful Brake System

AR(s)-125B C

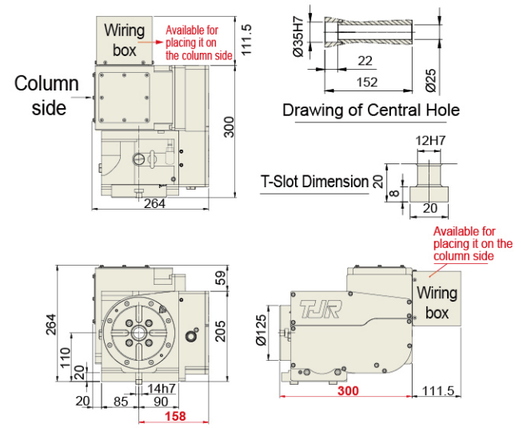

NEW Powerful Brake System

AR(s)-170B AR(s)-170HB (Hydraulic Brake) C

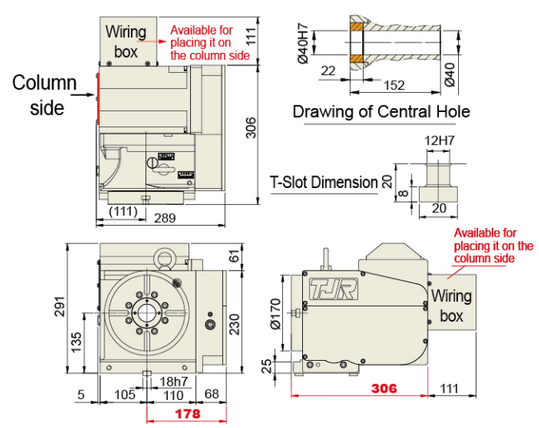

NEW Powerful Brake System

AR(s)-210B AR(s)-210HB (Hydraulic Brake) C

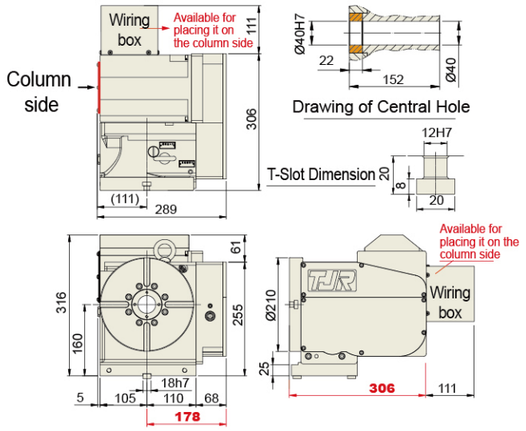

NEW Powerful Brake System

AR(s)-250B AR(s)-250HB (Hydraulic Brake) C

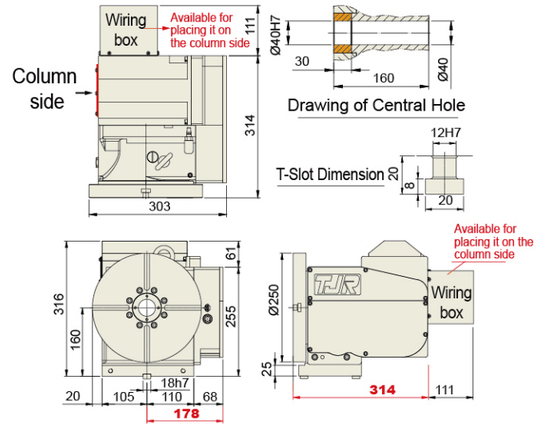

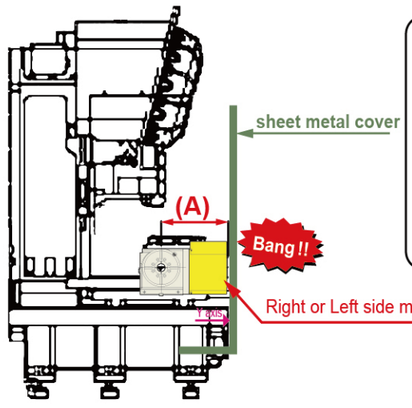

If the rotary table interferes with sheet metal cover (as shown, the distance A protrudes beyond sheet motor cover), it's recommended to choose back side motor type for AR series or right side motor with sheet metal cover reduction type for HR & HI series. (as Dia. to the right)

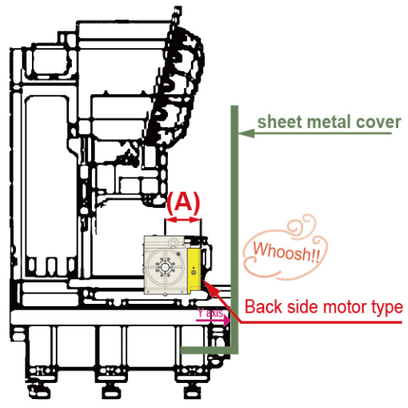

CNC Rotary Tables
(Min indexing angle – 0.001˚)

Driven by Worm & Worm Gear

HR Series
(Hydraulic Brake)
AR(s)-210H
HR(s)-255/320/400

Vertical | Horizontal



3 FEATURES



Alloy steel worm gear ▲ (Optional) for AR(s)-210H HR(s)-255

1. Use large-diameter ▲ radial & axial bearings
2. Employ a large-through-hole design while the table diameter exceeds 250mm. This design delivers high rigidity and provides bigger space for work piece setup with fixtures. (The hole diameter can be adjusted by adding a mandrel sleeve.)
3. High rotation rate design delivers high efficiency



◀ HR(s)-255N
(Reduced Sheet Metal Cover for Vertical Application)



◀ HR(s)-255R
(Sheet Metal Cover for Both Vertical and Horizontal Applications)

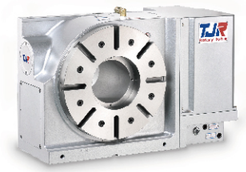

▲ HR-320N
(Reduced Sheet Metal Cover for Vertical Application)

Item / Model		Unit	AR(s)-210H	HR(s)-255	HR-320	HR- 400
Table Diameter		mm	Ø 210	Ø 255	Ø 320	Ø 400
Diameter of Table Central Hole		mm	Ø 67	Ø 110	Ø 150	Ø 150
Inner Diameter of Mandrel Sleeve		mm	Ø 40H7	Ø 80H7	Ø 120H7	Ø 120H7
Diameter of Center Through Hole		mm	Ø 40	**Ø 80** Big Bore	**Ø 120** Big Bore	**Ø120 or Ø150**
Center Height (Vertical)		mm	160	160	210	255
Table Height (Horizontal)		mm	152	200	235	250
Table T-slot Width		mm	12H7	12H7	14H7	14H7
Guide Block Width		mm	18h7	18h7	18h7	18h7
Min. Increment		deg.	0.001	0.001	0.001	0.001
Indexing Precision		sec.	20	15	15	15
Repeatability		sec.	6	6	6	6
Clamping System (Hydraulic)		kgf/cm^2	35	35	35	35
Clamping Torque		kgf·m	55	70	115	200
Servo Motor Model	FANUC	-	αiF4/αiF8/ßis8[Taper shaft]	αiF8/ßis8[Taper shaft]	αiF12/ßis22[Straight shaft]	αiF12/ßis22[Straight shaft]
	MITSUBISHI	Taper / Straight shaft	HG/HF-54/104	HG/HF-104/154	HG/HF-204	HG/HF-204
Speed Reduction Ratio		-	1 : 90	1 : 120	1 : 120	1 : 120
Max. Rotation Rate of Table (Calculate with Fanuc α Motor)		r.p.m	44.4 *(33.3)	**33.3** *(25)	**25**	**25**
Allowable Inertia Load Capacity (Horizontal)		kg.cm.sec^2	8.3	20.3	44.8	100
Allowable Workpiece Load	Vertical	kg	75	100	150	200
	with Tailstock	kg	150	250	350	500
	Horizontal	kg	150	250	350	500
Allowable Thrust Load (with Rotary Table Clamping)	F	kgf	1450	2000	3000	4000
	FxL	kgf·m	110	150	300	400
	FxL	kgf·m	55	70	115	200
Driving Torque		kgf·m	18 *(14.6)	55 *(19.6)	80	170
Net Weight (servo motor excluded)		kg	55	109	204	286

*( ) Alloy Steel worm & gear series

Driven by Worm & Worm Gear

AR(s)-210H

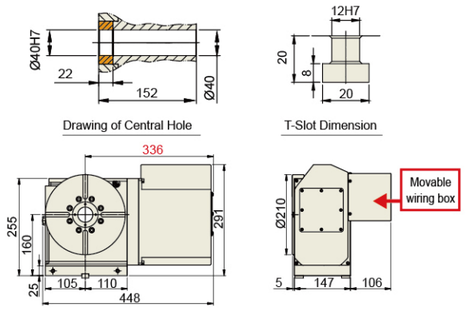

HR(s)-255R

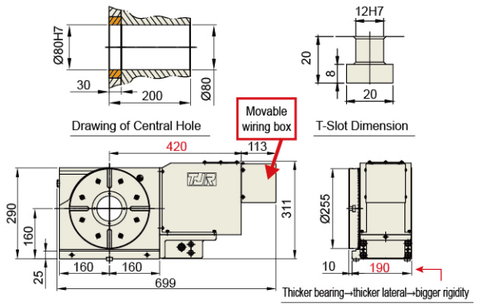

HR-320R

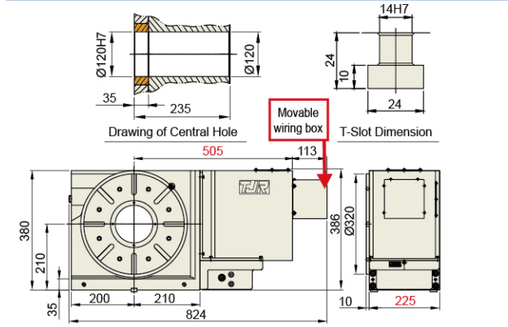

HR-400R

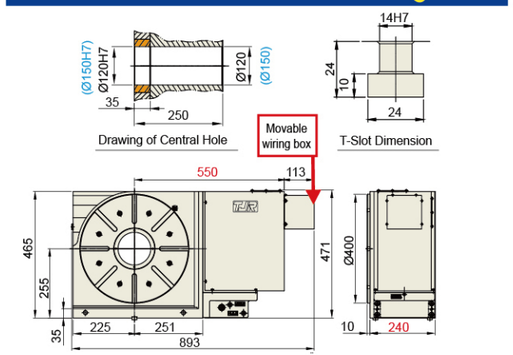

*( ) Ø150 central through hole is available.

AR(s)-250HR

Special specified model used for shorter machine

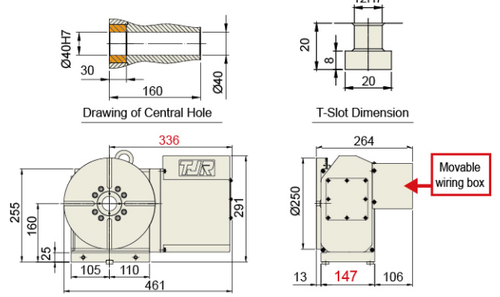

HR(s)-255N (Sheet metal cover reduction)

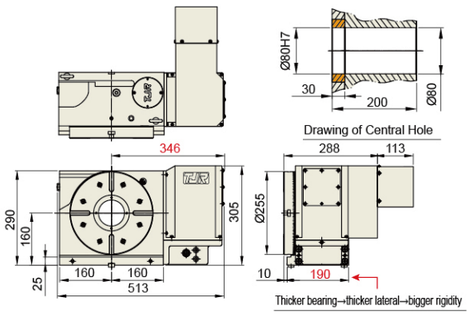

HR-320N (Sheet metal cover reduction)

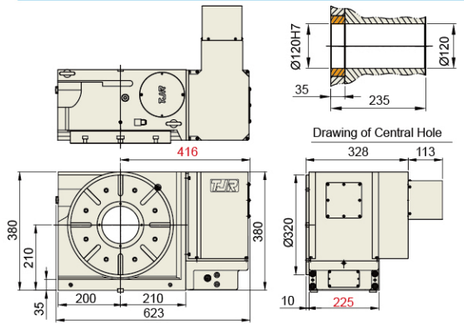

HR-400N (Sheet metal cover reduction)

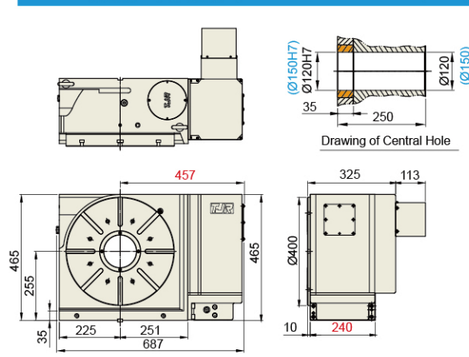

*( ) Ø150 central through hole is available.

CNC Rotary Tables
(Min indexing angle – 0.001°)

Driven by Worm & Worm Gear

HR Series
(Hydraulic Brake)
HR-500R/630R/800R

Vertical

Horizontal

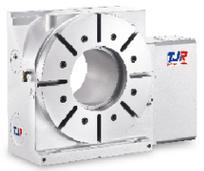

▲ HR-500R
(for Both Vertical and Horizontal Applications)

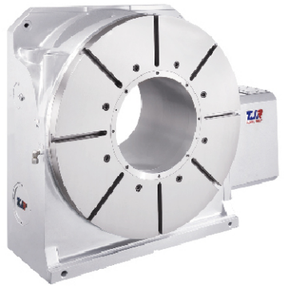

▲ HR-800 (for Both Vertical and Horizontal Applications)

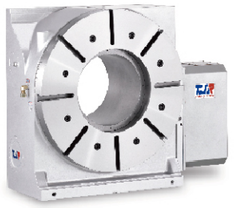

▲ HR-630R (for Both Vertical and Horizontal Applications)

2 FEATURES



1. Use large-diameter ▲ radial & axial bearings
2. Employ a large-through-hole design while the table diameter exceeds 250mm. This design delivers high rigidity and provides bigger space for work piece setup with fixtures.
(The hole diameter can be adjusted by adding a mandrel sleeve.)

Item / Model		Unit	HR-500R	HR-630R	HR-800R
Table Diameter		mm	Ø 500	Ø 630	Ø 800
Diameter of Table Central Hole		mm	Ø 250	Ø 325	Ø 395
Inner Diameter of Mandrel Sleeve		mm	Ø 220H7	Ø 280H7	Ø 350H7
Diameter of Center Through Hole		mm	Ø220 Big Bore	Ø280 Big Bore	Ø350 Big Bore
Center Height (Vertical)		mm	310	400	470
Table Height (Horizontal)		mm	290	325	350
Table T-slot Width		mm	18H7	18H7	18H7
Guide Block Width		mm	18h7	18h7	18h7
Min. Increment		deg.	0.001	0.001	0.001
Indexing Precision		sec.	15	15	15
Repeatability		sec.	6	6	6
Clamping System (Hydraulic)		kgf/cm²	35	35	35
Clamping Torque		kgf·m	370	800	800
Servo Motor Model	FANUC	Straight Shaft without Key	αiF12 / ßis22	αiF12 / ßis22	αiF22
	MITSUBISHI	Straight Shaft without Key	HG/HF-204	HG/HF-204	HG/HF-354
Speed Reduction Ratio		-	1 : 180	1 : 180	1 : 180
Max. Rotation Rate of Table (Calculate with Fanuc α Motor)		r.p.m	16.6	16.6	11.1
Allowable Inertia Load Capacity (Horizontal)		kg.cm.sec²	187.5	396.9	1200
Allowable Workpiece Load	Vertical	kg	250	400	800
	with Tailstock	kg	600	800	1500
	Horizontal	kg	600	800	1500
Allowable Thrust Load (with Rotary Table Clamping)	F	kgf	4000	5000	5000
	FxL	kgf·m	500	850	1000
	FxL	kgf·m	370	800	800
Driving Torque		kgf·m	250	420	800
Net Weight (servo motor excluded)		kg	405	692	991

HR-500R

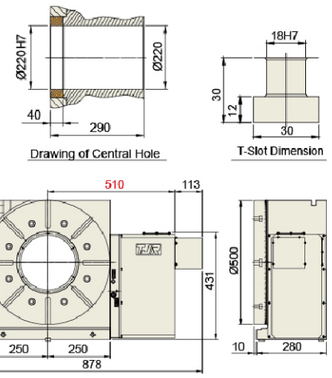

HR-630R

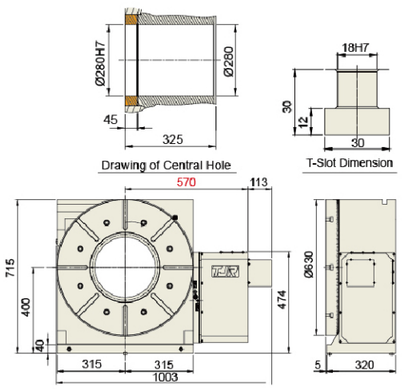

Manual Tilt rotary tables
(Min indexing angle – 0.001°)

Driven by Worm & Worm Gear

MTHR Manual Tilt Series
(Manual tilt axis ; CNC rotary axis - 0.001°)
MTHR(s)-255

Vertical & Horizontal

4 FEATURES



1. Use large-diameter ▲ radial & axial bearings
2. Fully sealed tilt axis
3. Powerful manual double disk brakes for tilt axis
4. Highly rigid structure of manual tilt axis



▲ MTHR(s)-255

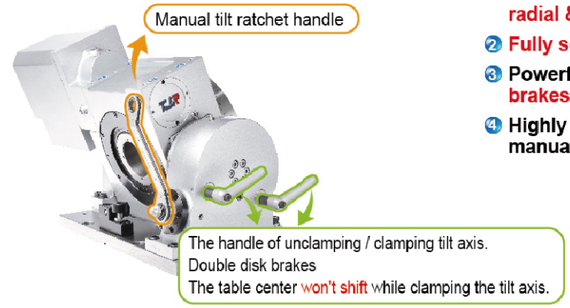

▲ MTHR(s)-255
Rear view + Ratchet handle



▲ Alloy steel worm gear (Optional)

Item / Model		Unit	MTHR(s)-255	
Table Diameter		mm	Ø255	
Diameter of Table Central Hole		mm	Ø110	
Inner Diameter of Mandrel Sleeve		mm	Ø80H7	
Diameter of Center Through Hole		mm	Ø80	
Table Height (Horizontal)		mm	275	
Table T-slot Width		mm	12H7	
Guide Block Width		mm	18h7	
Axis		-	Rotation	Tilt(0°~100°)
Min. Increment		deg.	0.001	-
Indexing Precision		sec.	15	-
Repeatability		sec.	6	-
Clamping System (Hydraulic)		kgf/cm²	Hyd.35	Manual double disk brakes
Clamping Torque		kgf·m	70	-
Servo Motor Model	FANUC	Taper/Straight shaft	αiF8 / ßis8 (Taper)	Manual
	MITSUBISHI	Straight shaft	HG/HF-104 / 154	Manual
Speed Reduction Ratio		-	1 : 120	1 : 40
Max. Rotation Rate of Table (Calculate with Fanuc α Motor)		r.p.m	33.3 *(25)	-
Allowable Inertia Load Capacity (Horizontal)		kg.cm.sec²	20.3	
Allowable Workpiece Load	0° Horizontal	kg	250	
	0°~90° Tilt	kg	100	
Allowable Load (with Rotary Table Clamping)	F	kgf	1600	
	FxL	kgf·m	85	
	FxL	kgf·m	70	
Driving Torque		kgf·m	55 *(31)	
Net Weight (servo motor excluded)		kg	145	

*( ) Alloy Steel worm & gear series

MTHR(s)-255 (Manual tilt)

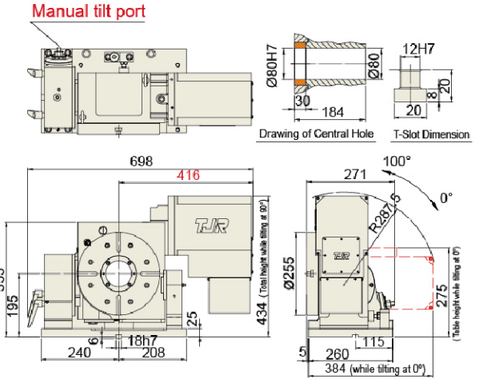

HR-800R

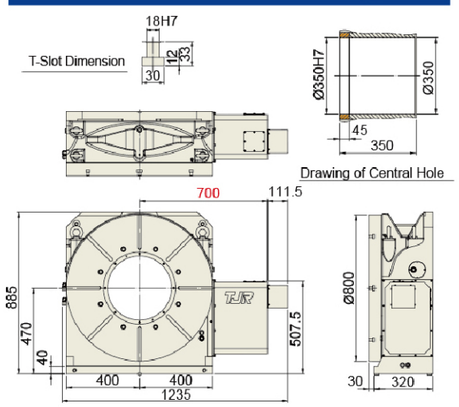

CNC Rotary Tables
(Min indexing angle – 0.001°)

Driven by Worm & Worm Gear

HR Series

(Hydraulic Brake - Back Side Motor)

HR-320B/320B-2W/400B

FEATURE



Use radial & axial bearings

Vertical



▲ HR-320B (Back Side Motor)

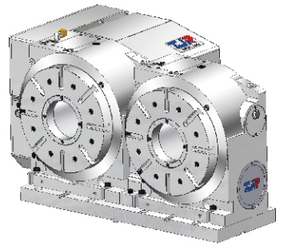

▲ HR-320B-2W (Back Side Motor / 2-wheel coupled)

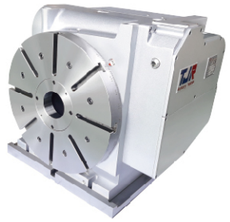

▲ HR-400B
(Back Side Motor)

Item / Model		Unit	HR-320B	HR-320B-2W	HR-400B
Table Diameter		mm	Ø 320	Ø 320	Ø400
Diameter of Table Central Hole		mm	Ø 150	Ø 150	Ø150
Inner Diameter of Mandrel Sleeve		mm	Ø 120H7	Ø 120H7	Ø120H7
Diameter of Center Hole x Depth		mm	**Big Bore Ø120x217 Deep**	**Big Bore Ø120x217 Deep**	**Big Bore Ø120x220 Deep**
Center Height (Vertical)		mm	255	270	255
Table Height (Horizontal)		mm	-	-	-
Minimum distance between table centers		mm	-	400	-
Table T-slot Width		mm	14H7	14H7	14H7
Guide Block Width		mm	18h7	18h7	18h7
Min. Increment		deg.	0.001	0.001	0.001
Indexing Precision		sec.	15	15	15
Repeatability		sec.	6	6	6
Clamping System (Hydraulic)		kgf/cm^2	35	35	35
Clamping Torque		kgf·m	115	115	200
Servo Motor Model	FANUC	Straight Shaft without Key	αiF12 / βis22	αiF12 / βis22	αiF12 / βis22
	MITSUBISHI	Straight Shaft without Key	HG/HF- 204	HG/HF- 204	HG/HF-204
Speed Reduction Ratio		-	1 : 150	1 : 150	1 : 120
Max. Rotation Rate of Table (Calculate with Fanuc α Motor)		r.p.m	**25**	**25**	25
Allowable Inertia Load Capacity (Horizontal)		kg.cm.sec^2	-	-	-
Allowable Workpiece Load	Vertical	kg	150	150	200
	with Tailstock	kg	350	350	500
	Horizontal	kg	-	-	-
Allowable Thrust Load (with Rotary Table Clamping)	F	kgf	3000	3000	4000
	FxL	kgf·m	300	300	400
	FxL	kgf·m	115	115	200
Driving Torque		kgf·m	80	80	170
Net Weight (servo motor excluded)		kg	-	-	281

TJR CNC Rotary Table

CNC Rotary Tables
(Min indexing angle – 0.001°)

HR Series

(Embedded type)

iHHR-400

Horizontal

FEATURE



Use radial & axial bearings



▶ iHHR-400

Item / Model		Unit	iHHR- 400
Table Diameter		mm	Ø 400
Diameter of Table Central Hole		mm	-
Inner Diameter of Mandrel Sleeve		mm	-
Diameter of Center Through Hole		mm	-
Center Height (Vertical)		mm	-
Table Height (Horizontal)		mm	-
Minimum distance between table centers		mm	-
Table T-slot Width		mm	14H7
Guide Block Width		mm	-
Min. Increment		deg.	0.001
Indexing Precision		sec.	15
Repeatability		sec.	4
Clamping System (Hydraulic)		kgf/cm^2	35
Clamping Torque		kgf·m	200
Servo Motor Model	FANUC	Straight shaft	αiF12 / βis22
	MITSUBISHI	Straight shaft	HF-204
Speed Reduction Ratio		-	1 : 150
Max. Rotation Rate of Table (Calculate with Fanuc α Motor)		r.p.m	20
Allowable Inertia Load Capacity (Horizontal)		kg.cm.sec^2	100
Allowable Workpiece Load	Vertical	kg	-
	with Tailstock	kg	-
	Horizontal	kg	500
Allowable Load (with Rotary Table Clamping)	F	kgf	4000
	FxL	kgf·m	400
	FxL	kgf·m	200
Driving Torque		kgf·m	170
Net Weight (servo motor excluded)		kg	-

HR-320B (Back Side Motor)

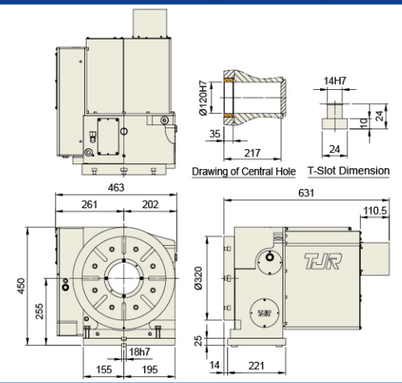

HR-320B-2W (Back side motor / 2-wheel coupled)

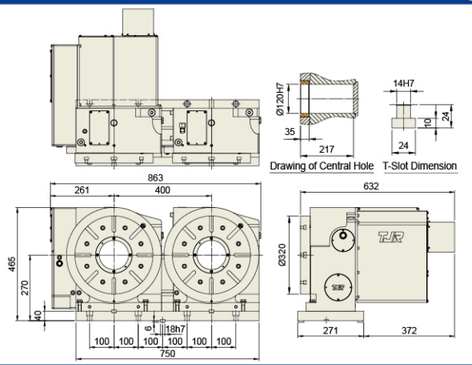

HR-400B (Back side motor)

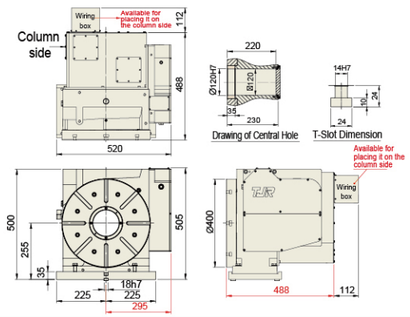

iHHR-400 (Embedded type)

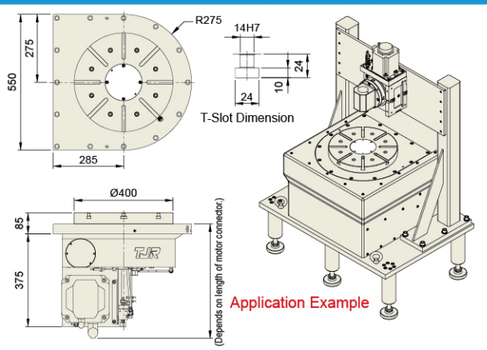

Driven by Worm & Worm Gear

CNC Multi Spindle Rotary Tables (Min indexing angle – 0.001°)

Driven by Worm & Worm Gear

Vertical

AR multi spindle 2W Series
(2-wheel coupled, Powerful Pneumatic Brake)
AR(s)-125-2W/170-2W/210-2W

AR multi spindle 3W Series
(3-wheel coupled, Powerful Pneumatic Brake)
AR(s)-125-3W/170-3W/210-3W

AR multi spindle 4W Series
(4-wheel coupled, Powerful Pneumatic Brake)
AR(s)-125-4W

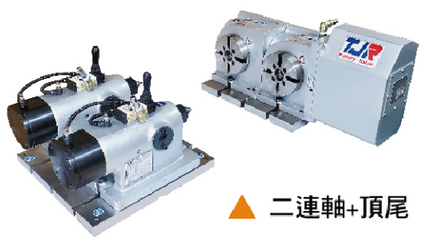

▲ 二連軸+頂尾



▲ Alloy steel worm gear
(Optional)

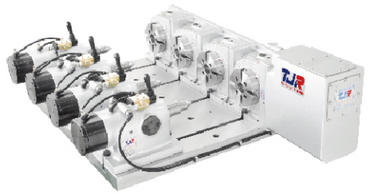

▲ AR(s)-125-4W
4 wheel coupled + manual tailstock + big base plate



▲ AR(s)-170-2W
(Horizontal application)
(Pneumatic chuck is optional)

Item / Model		Unit	AR(s)-125-2W/3W/4W	AR(s)-170-2W/3W	AR(s)-210-2W/3W
Table Diameter		mm	Ø 125	Ø 170	Ø 210
Diameter of Table Central Hole		mm	Ø 35H7	Ø 67	Ø 67
Inner Diameter of Mandrel Sleeve		mm	-	Ø 40H7	Ø 40H7
Diameter of Center Through Hole		mm	Ø 25	Ø 40	Ø 40
Center Height(Vertical)		mm	135	175	200
Minimum distance between table centers		mm	200	300	300
Table T-slot Width		mm	12H7	12H7	12H7
Guide Block Width		mm	14h7	18h7	18h7
Min. Increment		deg.	0.001	0.001	0.001
Indexing Precision		sec.	60 [2w,3w] / 90 [4w]	40	40
Repeatability		sec.	6	6	6
Clamping System (Pneumatic)		kgf/cm²	6	6	6
Clamping Torque		kgf·m	13	31	31
Servo Motor Model	FANUC	Taper Shaft with Key	【2w】αiF4 / βis8 【3w】αiF8 / βis8 【4w】αiF8 / βis12	αiF8 / ßis12	αiF8 / ßis12
	MITSUBISHI	Straight Shaft without Key	【2w】HG / HF-104 【3w】HG / HF-154 【4w】HG / HF-224	HG/HF-104/154	HG/HF-104/154
Speed Reduction Ratio		-	1 : 60	1 : 90	1 : 90
Max. Rotation Rate of Table (Calculate with Fanuc α Motor)		r.p.m	83.3 *(33.3)	44.4 *(33.3)	44.4 *(33.3)
Allowable Inertia Load Capacity (Horizontal)		kg.cm.sec²	-	5.4	8.3
Allowable Workpiece Load	Vertical	kg	50	75	75
	with Tailstock	kg	100	150	150
Allowable Load (with Rotary Table Clamping)	F	kgf	1000	1450	1450
	FxL	kgf·m	45	110	110
	FxL	kgf·m	13	31	31
Driven Torque		kgf·m	9 *(3.7)	18 *(14.6)	18 *(14.6)
Net Weight (servo motor excluded)		kg	82 / 120 / -	- / -	- / -

*( ) Alloy Steel worm & gear series

TJR CNC Rotary Table

Driven by Worm & Worm Gear

NEW Powerful Brake System

AR(s)-125-2W C

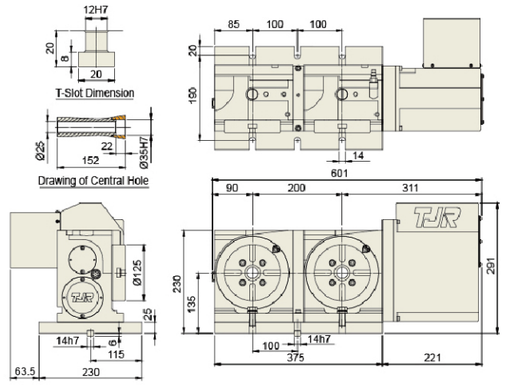

NEW Powerful Brake System

AR(s)-170-2W (Standard type) C

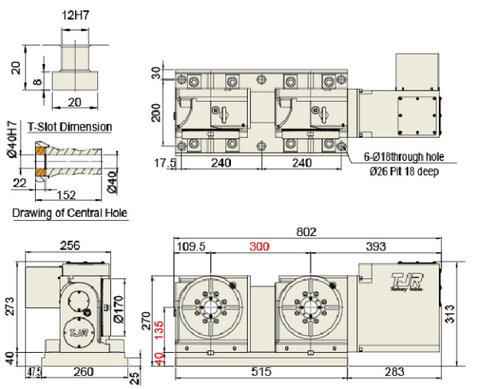

NEW Powerful Brake System

AR(s)-125-3W (Standard type) C

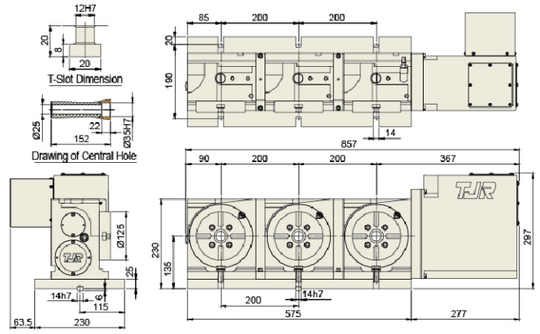

NEW Powerful Brake System

AR(s)-170-3W (Standard type) C

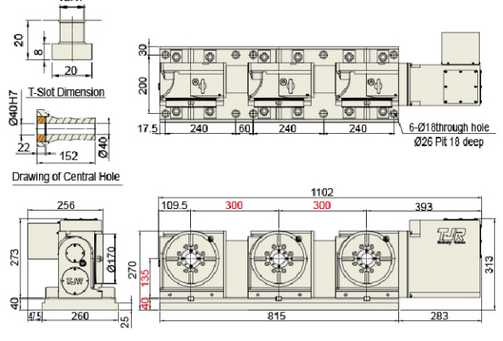

NEW Powerful Brake System

AR(s)-125-4W (Standard type) C

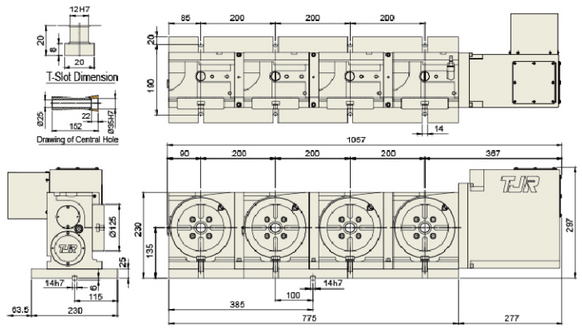

NEW Powerful Brake System

AR(s)-210-2W (Standard type) C

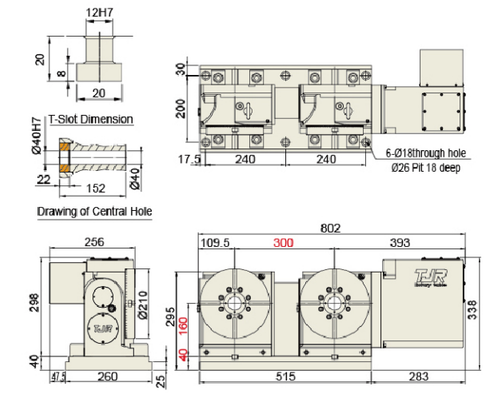

CNC Index Tables
Min. indexing angle – 1° or 5°

Driven by Worm & Worm Gear

HI Series
(Hirth coupling hydraulic brake)
HI-255/320/400/500

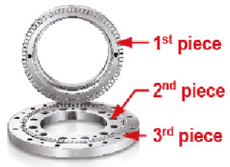

HI Series :
Use three-piece clutch plate

Function:
①Accuracy: ±5 seconds
(Angle encoder accuracy)
②Rotate without lifting the table to prevent table from water and particles.

Vertical Horizontal

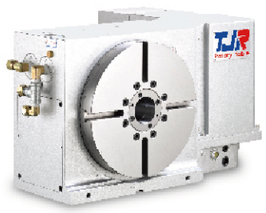
▲ HI-255N


▲ HI-320N


▲ HI-500

Item / Model		Unit	HI-255	HI-320	HI-400	HI-500
Table Diameter		mm	Ø 255	Ø 320	Ø 400	Ø 500
Diameter of Table Central Hole		mm	Ø 50H7	Ø 80H7	Ø 80H7	Ø 120H7
Diameter of Center Through Hole		mm	Ø 50	Ø 80	Ø 80	Ø 120
Center Height (Vertical)		mm	160	210	255	310
Table Height (Horizontal)		mm	205	250	255	290
Table T-slot Width		mm	12H7	14H7	14H7	18H7
Guide Block Width		mm	18h7	18h7	18h7	18h7
Min. Increment		deg.	1 or 5	1 or 5	1 or 5	1 or 5
Indexing Precision		sec.	±5	±5	±5	±5
Repeatability		sec.	±1	±1	±1	±1
Clamping System (Hydraulic)		kgf/cm^2	35	35	35	35
Clamping Torque		kgf·m	300	400	500	1000
Servo Motor Model	FANUC	-	ßis8 (Taper shaft)	ßis22 (Straight shaft)	ßis22 (Straight shaft)	ßis22 (Straight shaft)
	MITSUBISHI	Taper shaft	HG/HF-104 / 154	HG/HF-204	HG/HF-204	HG/HF-204
Speed Reduction Ratio		-	1 : 120	1 : 120	1 : 120	1 : 180
Max. Rotation Rate of Table (Calculate with Fanuc α Motor)		r.p.m	**33.3**	**25**	**25**	16.6
Allowable Inertia Load Capacity (Horizontal)		$kg.cm.sec^2$	24.8	44.8	100	187.5
Allowable Workpiece Load	Vertical	kg	125	175	250	400
	with Tailstock	kg	300	400	500	600
	Horizontal	kg	300	350	500	600
Allowable Thrust Load (with Rotary Table Clamping)	F	kgf	1600	2000	3000	4000
	FxL	kgf·m	175	250	300	600
	FxL	kgf·m	300	400	500	1000
Net Weight (servo motor excluded)		kg	120	210	320	410

TJR CNC Rotary Table

Driven by Worm & Worm Gear

HI-255R

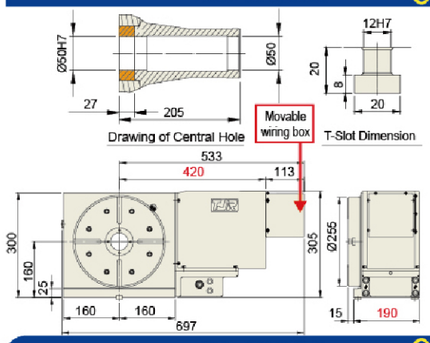

HI-320R

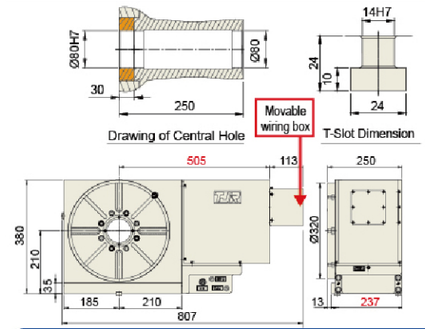

HI-400R

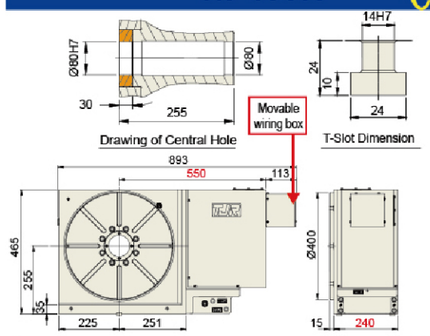

HI-500R

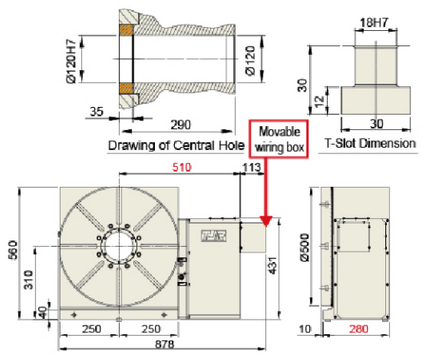

HI-255N (Sheet metal cover reduction)

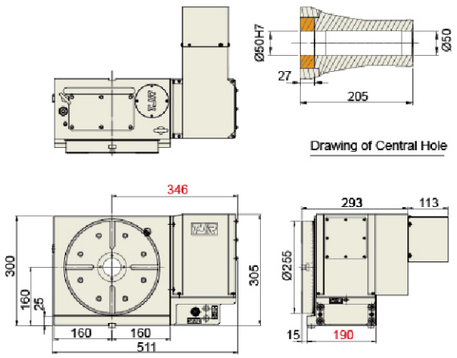

HI-320N (Sheet metal cover reduction)

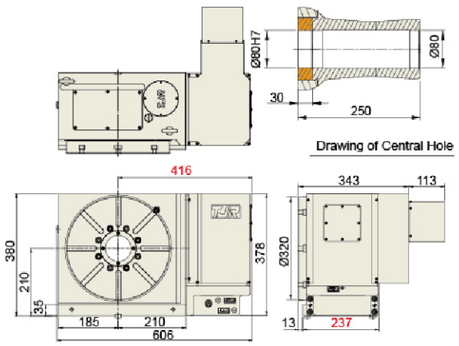

HI-400N (Sheet metal cover reduction)

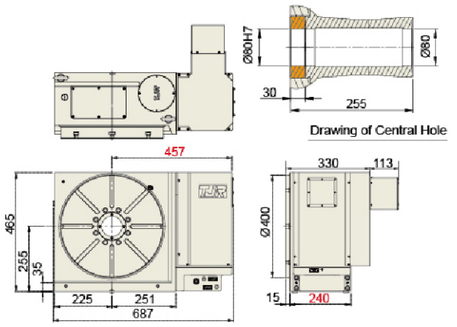


▲ RTH-255

◀ **Hydraulic Brake Support Table (with Delay Valve)**
When HI series is chosen, the corresponding support table should have a delay valve.

TJR CNC Rotary Table

CNC Indexing tables (Horizontal only)
(Min indexing angle - 1°or 5°)

Driven by Worm & Worm Gear

HHI Series
(Hirth coupling hydraulic brake)

Horizontal

For horizontal machining center
or horizontal drilling & tapping center.

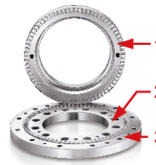

▲ **HHI Series :**
Use three-piece clutch plate
Function:
①**Accuracy: ±5 seconds**
(Angle encoder accuracy)
②**Rotate without lifting the table to prevent table from water and particles.**

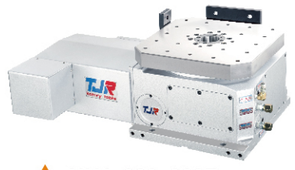

▲ **HH I -320x320F**
For small Horizontal drilling & tapping center.

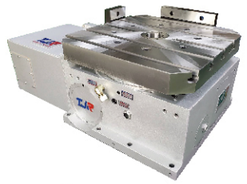

▲ **HHR-400x400F**



▲ **HH I -500x500**
High loading(HL)
version is an alternative



▲ **HH I -630x630**



▲ **HH I -800x800**
High loading(HL)
version is an alternative



▲ **HH I -1000x1000**
High loading(HL)
version is an alternative

HH I -320x320F (1° or 5°)

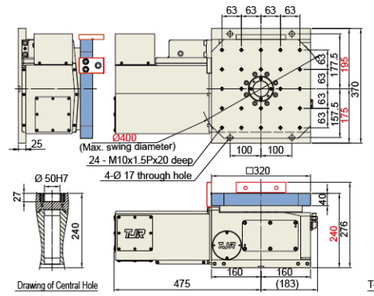

HH I -400x400A (1° or 5°)

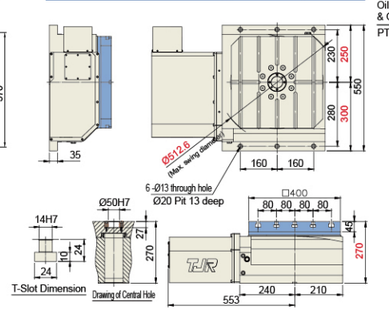

HH I -800x800 (1° or 5°)

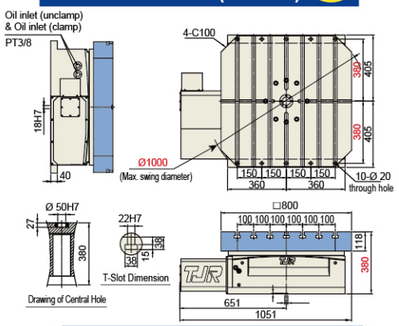

HH I -500x500 (1° or 5°)

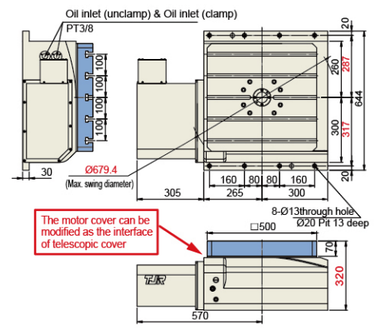

HH I -630x630 (1° or 5°)

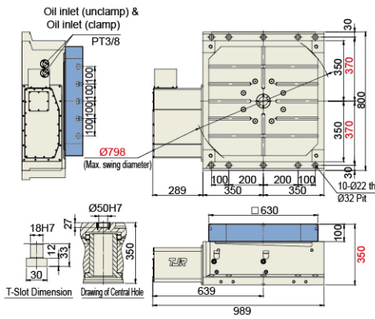

HH I -1000x1000 (1° or 5°)

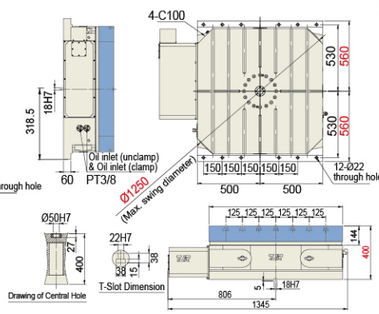

HHR-400x400 (0.001°)

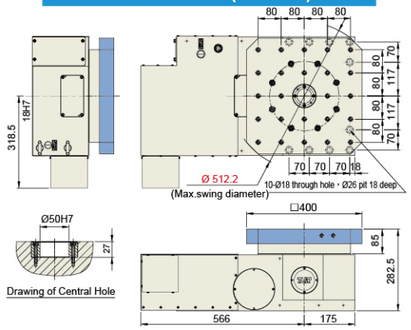

HHR-500x500 (0.001°)

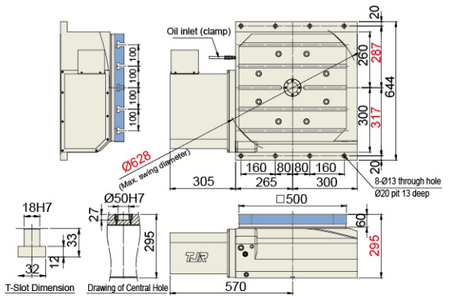

Item / Model		Unit	HHI-320x320F	HHI-400x400A	HHI-500x500	HHI-630x630	HHI-800x800	HHI-1000x1000	HHR-400x400	HHR-500x500
Table size		mm	□ 320x320	□ 400x400	□ 500x500	□ 630x630	□ 800x800	□ 1000x1000	□ 400x400	□ 500x500
Diameter of Table Central Hole		mm	Ø 50x27 deep	Ø 50x27 deep	Ø 50x27 deep	Ø 50H7x27 deep	Ø 50x27 deep	Ø 50x27 deep	Ø 50x27 deep	Ø 50x27 deep
Table height		mm	240	270	320	350	380	400	282.5	295
Table T-slot Width		mm	-	14H7	18H7	18H7	22H7	22H7	-	18H7
Guide Block Width		mm	18h7	18h7	18h7	18h7	18h7	18h7	18h7	18h7
Min. Increment		deg.	1 or 5	1 or 5	1 or 5	1 or 5	1 or 5	1 or 5	0.001	0.001
Indexing Precision		sec.	±5	±5	±5	±5	±5	±5	20	15
Repeatability		sec.	±1	±1	±1	±1	±1	±1	6	6
Clamping System (Hydraulic)		kgf/cm²	35	35	35	35	35	35	45	35
Clamping Torque		kgf·m	-	-	-	-	-	-	155	370
Servo Motor Model	FANUC	Straight shaft without key	ßis12	ßis22	ßis22	αiF12 / ßis22	ßis22	αiF22	αiF12i / ßis22	αiF12i / ßis22
	MITSUBISHI		HF/HG-104/154	HF/HG-204	HF/HG-204	HF/HG-204	HF/HG-354	HF/HG-354	HF/HG-204	HF/HG-204
Speed Reduction Ratio		-	1:120	1:120	1:180	1:180	1:180	1:360	1:120	1:180
Max. Rotation Rate of Table (Calculate with Fanuc a motor)		r.p.m	25	25	16.6	16.6	11.1	8.3	25	16.6
Allowable Workpiece Load	Horizontal	kg	300	600	1200	1800	4000	5000	500	600
Allowable Thrust Load (with Rotary Table Clamping)	F	kgf	1600	3000	4000	6000	9000	10000	2500	4000
	FxL	kgf·m	175	300	600	650	1950	2200	300	500
	FxL	kgf·m	300	500	1000	1200	4000	4000	155	370
Net Weight (servo motor excluded)		kg	149	-	518	565	1053	1971	-	510

Non-CNC Hydraulic index table

HC Series

(Hirth coupling hydraulic brake)

HC-255A/320A(Equal Parts)

Vertical Horizontal



Driven by Worm & Worm Gear

Refer to page 10 for HC series application.

HC-255A

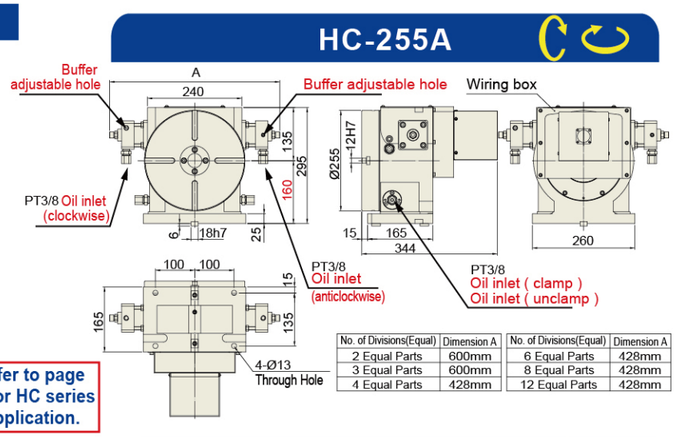

No. of Divisions(Equal)	Dimension A	No. of Divisions(Equal)	Dimension A
2 Equal Parts	600mm	6 Equal Parts	428mm
3 Equal Parts	600mm	8 Equal Parts	428mm
4 Equal Parts	428mm	12 Equal Parts	428mm

HC-320A

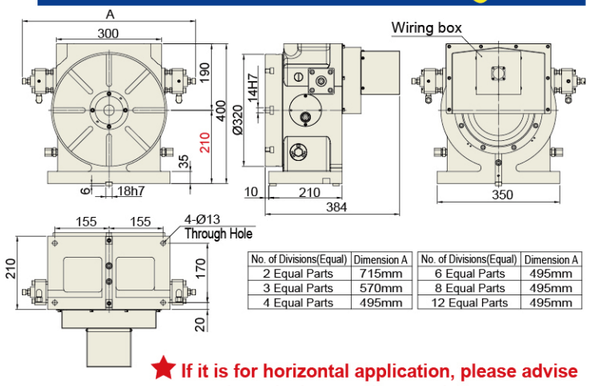

No. of Divisions(Equal)	Dimension A	No. of Divisions(Equal)	Dimension A
2 Equal Parts	715mm	6 Equal Parts	495mm
3 Equal Parts	570mm	8 Equal Parts	495mm
4 Equal Parts	495mm	12 Equal Parts	495mm

★ If it is for horizontal application, please advise us when placing purchase order.

HC-255A

(for Both Vertical and Horizontal Applications) (A additional raiser must be employed whenever horizontal application is needed)

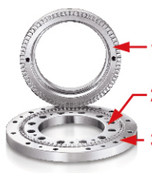

HC Series：
Use three-piece clutch plate

Function:
①Accuracy: ±5 seconds (Angle encoder accuracy)
②Rotate without lifting the table to prevent table from water and particles.



Hydraulic Brake Support Table (with Delay Valve)
When HC series is chosen, the corresponding support table should have a delay valve.

Item / Model		Unit	HC-255A	HC-320A	HHC-500
Table Diameter		mm	Ø 255	Ø 320	Ø 500
Diameter of Table Central Hole		mm	Ø 30H7 x 12deep	Ø 30H7 x 34deep	Ø 90H7 x 31deep
Diameter of Center Through Hole		mm	Ø 27	Ø 30	Ø 41
Center Height (Vertical)		mm	160	210	–
Table Height (Horizontal)		mm	180	220	260
Table T-slot Width		mm	12H7	14H7	18H7
Guide Block Width		mm	18h7	18h7	–
No. of Divisions (Equal)		deg.	2、3、4、6、8、12、24		
Indexing Precision		sec.	±5	±5	±5
Repeatability		sec.	±1	±1	±1
Clamping System (Hydraulic)		kgf/cm²	35	35	35
Clamping Torque		kgf·m	154	280	995
Allowable Instant Inertia		kg.cm.sec²	17.88	51.2	218
Allowable Workpiece Load	Vertical	kg	110	200	–
	Horizontal	kg	200	400	700
Allowable Thrust Load (with Rotary Table Clamping)	F	kgf	1300	1500	3500
	FxL	kgf·m	94.5	136.5	578
	FxL	kgf·m	154	227.5	995
Rotating Torque		kgf·m	42	60	–
Rotary Table Total Weight		kg	65	98	214

Refer to page 30 for the top, front and side views

CHC Series

(Flat type auto pallet changer)

CHC-500(700x910)
CHC-500(700x1090)

Horizontal

Hirth coupling hydraulic brake (180° to and fro)

For 3-axis-moving-column vertical machining center

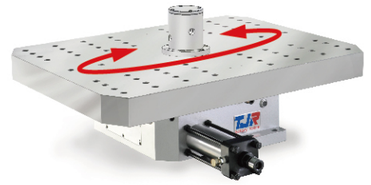

CHC-700x910 (tray type APC)

(optional hydraulic distributor)

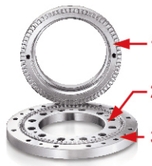

HC Series：
Use three-piece clutch plate

Function:
①Accuracy: ±5 seconds (Angle encoder accuracy)
②Rotate without lifting the table to prevent table from water and particles.

Pallet changing time is 4~5 seconds, which excludes PLC delayed time of machine

CHC-700x910 (Pallet changer)

Table size can be customized

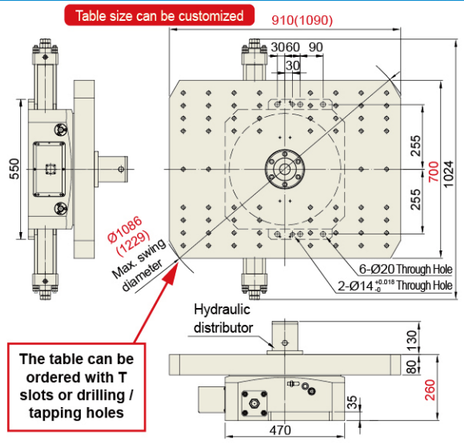

HHC-500

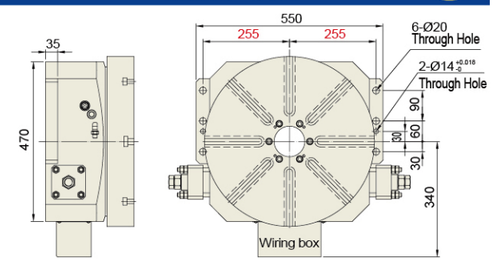

Refer to page 29 for the specification table.

Item / Model	Unit	CHC-500(700x1090)
Table size	mm	□700 x 1090
Rotation method	–	Hydraulic gear
Rotation angle (Equal)	deg.	180° to and fro (2 equal)
Indexing Precision	sec.	±5
Repeatability	sec.	±1
Positioning method	–	3-piece clutch plate
Clamping System	kgf/cm²	Hyd.35
Clamping force	kgf	4600
Allowable Workpiece Load Horizontal	kg	700
Inspection accuracy		
Runout of table top during rotation	mm	0.02
Runout of table central hole	mm	0.01
Parallelism of table top to frame bottom	mm	0.02
Flatness of table top (Lower in the center)	mm	0.02
Total Weight	kg	525

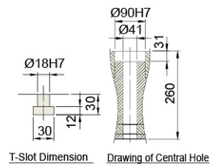

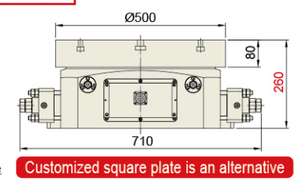

Customized square plate is an alternative

Application diagram of auto pallet changer
(Available for 4-hole hydraulic distributor)

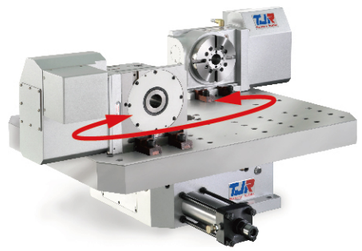

Application diagram: retrofits 3-axis-moving-column vertical machining center with CHC



Driven by Worm & Worm Gear

TJR CNC Rotary Table

Driven by Worm & Worm Gear

CNC Tilting Rotary Tables
Min. indexing angle –0.001°

FAR Series
Dual-axis dual-arm type
(Powerful Pneumatic Brake)

FAR(s)-125/125B/170A/170/170B

4 FEATURES





1. Both the tilting axis and rotary axis use radial & axial bearings.
2. Because the tilting axis normally needs to bear heavy load, Japanese-made worm and worm gear are employed to improve wear resistance and precision of tilting axis. standard component
   (It's wear life is 2.6 times longer than aluminum bronze PBC3.)
3. Anti-wear alloy steel worm gear is optional
4. A hydraulic brake for tilting axis is optional.

Vertical & Horizontal



Rotary axis Dual-lead Alloy steel worm gear (Optional)

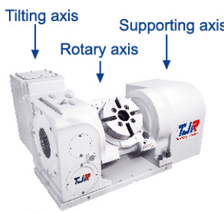

▲ FAR(s)-125



▲ FAR(s)-170A(compact type)



▲ FAR(s)-170



▲ Workpiece sample – 5 axis simultaneous contouring

Item / Model		Unit	FAR(s)-125/125B		FAR(s)-170A(Compact type)		FAR(s)-170(Standard type)/FAR(s)-170B(Back side motor type)	
Table Diameter		mm	Ø125		Ø170		Ø170	
Diameter of Table Central Hole		mm	Ø 35H7		Ø67		Ø67	
Inner Diameter of Mandrel Sleeve		mm	-		Ø40H7		Ø40H7	
Diameter of Center Through Hole		mm	Ø25		Ø40		Ø40	
Table Height (Horizontal)		mm	215		245		270	
Table T-slot Width		mm	12H7		12H7		12H7	
Guide Block Width		mm	14h7		18h7		18h7	
Axis		–	Rotation	Tilt (-30° ~ +120°)	Rotation	Tilt ±100°	Rotation	Tilt ±100°
Min. Increment		deg.	0.001	0.001	0.001	0.001	0.001	0.001
Indexing Precision (while tilt 0°~+90°)		sec.	40	60*1	20	60*1	20	60*1
Repeatability		sec.	6	8	6	8	6	8
Clamping System (Pneumatic)		kgf/cm²	6	6	6	6	6	6
Clamping Torque		kgf·m	13	31	25	31	31	31
Servo Motor Model	FANUC	Taper/Straight shaft	αis4 / βis4	αiF4 / βis8	αiS4 / βis4	αiF4 / βis8	αiF4 / βis8	αiF8 / αis12 / βis12
	MITSUBISHI	Taper/Straight shaft	HG/HF-75 / 105	HG/HF-54 / 104	HG/HF-75 / 105	HG/HF-54 / 104	HG/HF-54 / 104	HG/HF-104
Speed Reduction Ratio		–	1 : 60	1 : 90	1 : 72	1:120 / SIEMENS 1:90	1 : 90	1 : 90
Max. Rotation Rate of Table (Calculate with Fanuc α Motor)		r.p.m	44.4 *(33.3)	44.4 *(33.3)	33.3 *(33.3)	25 *(16.6)	33.3 *(33.3)	33.3 *(16.6)
Allowable Inertia Load Capacity (Horizontal)		kg.cm.sec²	0.97		2.2		2.7	
Allowable Workpiece Load	0° Horizontal	kg	50		60		75	
	0°~90° Tilt	kg	35		40		50	
Allowable Thrust Load (with Rotary Table Clamping)	F	kgf	400		600		750	
	FxL	kgf·m	31		31		31	
	FxL	kgf·m	13		25		31	
Driving Torque (Rotary axis)		kgf·m	9 *(3.7)		18 *(14.6)		18 *(14.6)	
Net Weight (servo motor excluded)		kg	97 / -		125		153	

*( ) Alloy Steel worm & gear series
*1. Indexing precision can be better after installing an additional angle encoder. Please refer to the table on page 70 for more details.
★ Dual-lead alloy steel worm & gear for the rotary axis is optional.

FAR(s)-125 (Standard type)

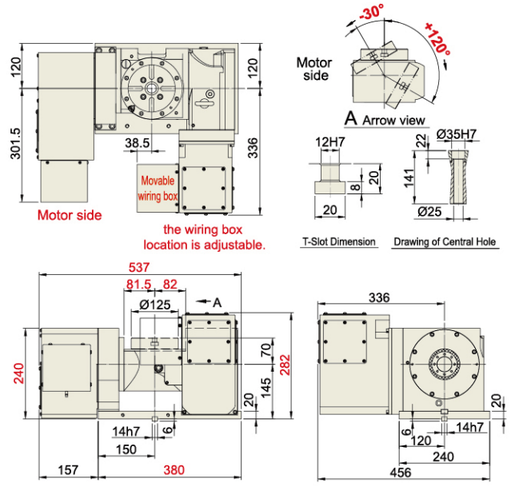

FAR(s)-125B (Back side motor type)

The tilting axis of back side motor type cannot be equipped with angle encoder.

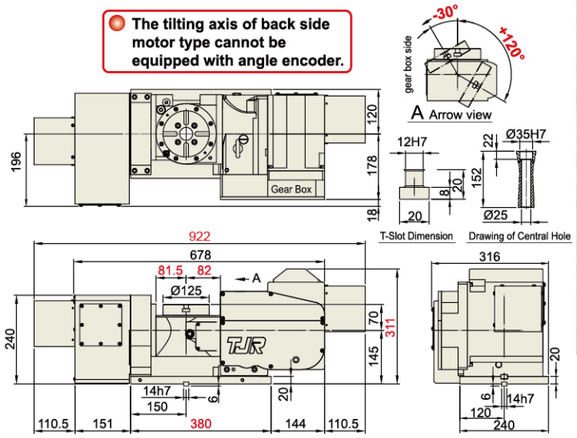

Hydraulic tilt axis FAR(s)-170H/170HA/170HB are alternatives.

FAR(s)-170A FAR(s)-170HA (Compact type)

FAR(s)-170 FAR(s)-170HB (Standard type)

★ In accordance with the foreign trade control ordinance, permission of the ministry of economy, trade and industry is required when exporting dual-axis products overseas.

TJR CNC Rotary Table

Driven by Worm & Worm Gear

CNC Tilting Rotary Tables
Min. indexing angle –0.001°

FAR Series

Dual-axis single-arm type
(Pneumatic Brake)
FAR(s)-160SN

Dual-axis dual-arm type
(Powerful Pneumatic Brake)
FAR(s)-210/210B/210L

4 FEATURES

Vertical & Horizontal





1. Both the tilting axis and rotary axis use radial & axial bearings.
2. Because the tilting axis normally needs to bear heavy load, Japanese-made worm and worm gear are employed to improve wear resistance and precision of tilting axis. standard component
   (It's wear life is 2.6 times longer than aluminum bronze PBC3.)
3. Anti-wear alloy steel worm gear is optional
4. A hydraulic brake for tilting axis is optional.



Rotary axis Dual-lead
Alloy steel worm gear
(Optional)



▲ FAR(s)-160SN
(single-arm type)
Alloy steel worm gear
(Optional)

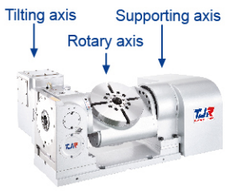

▲ FAR(s)-210(Standard type)



▲ FAR(s)-210B
(Back side motor type)



Installation of
5C Chuck

FAR(s)-160SN (Single-arm type)

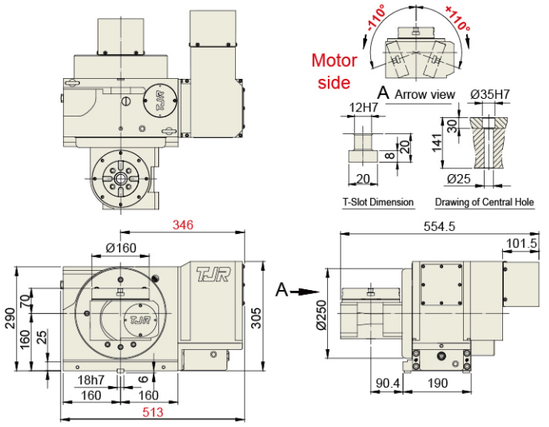

FAR(s)-170B (Back side motor type)

FAR(s)-170HB

The tilting axis of back side motor type cannot be equipped with angle encoder.

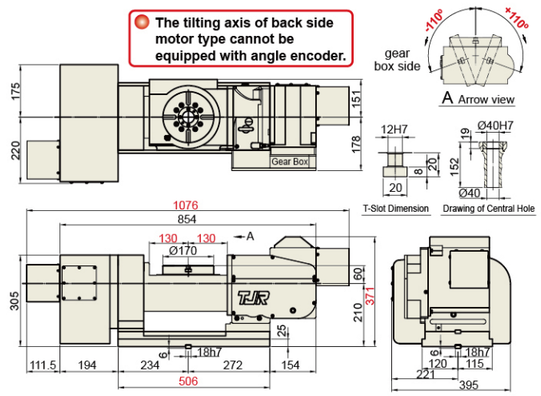

Remark: Please refer to Page 32 for the specification of FAR-170B

Hydraulic tilt axis FAR(s)-210H/210HB are alternatives.

FAR(s)-210 (Standard type)

FAR(s)-210H

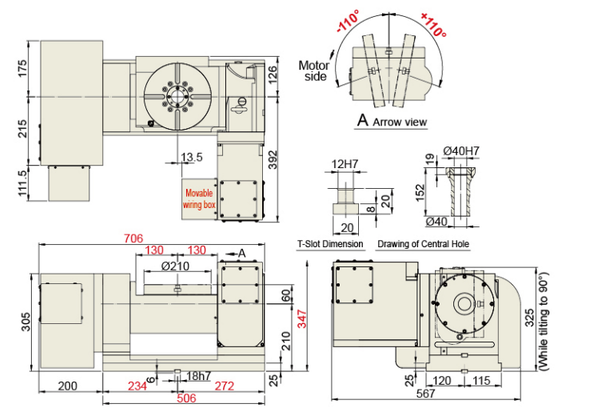

FAR(s)-210B (Back side motor type)

FAR(s)-210HB

The tilting axis of back side motor type cannot be equipped with angle encoder.

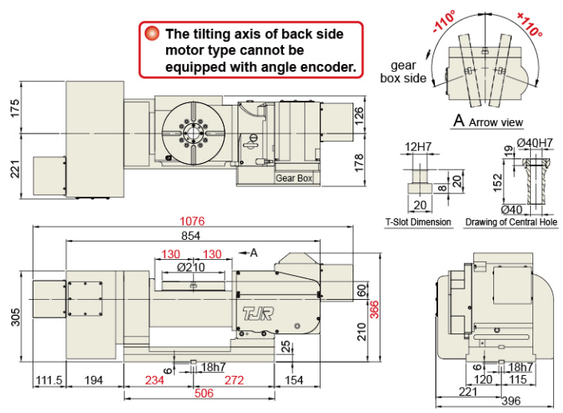

Item / Model		Unit	FAR(s)-160SN(single-arm type)		FAR(s)-210 (Standard type)		FAR(s)-210B (Back side motor type)	
Table Diameter		mm	Ø160		Ø210		Ø210	
Diameter of Table Central Hole		mm	Ø35H7x30 deep		Ø67		Ø67	
Inner Diameter of Mandrel Sleeve		mm	-		Ø40H7		Ø40H7	
Diameter of Center Through Hole		mm	Ø25		Ø40		Ø40	
Table Height (Horizontal)		mm	230		270		270	
Table T-slot Width		mm	12H7		12H7		12H7	
Guide Block Width		mm	18h7		18h7		18h7	
Axis		-	Rotation	Tilt ±110°	Rotation	Tilt ±100°	Rotation	Tilt ±100°
Min. Increment		deg.	0.001	0.001	0.001	0.001	0.001	0.001
Indexing Precision (while tilt 0°~+90°)		sec.	40	60	20	60*1	20	60*1
Repeatability		sec.	6	8	6	8	6	8
Clamping System (Pneumatic)		kgf/cm²	Pne.5	35	6	6 / Hyd.35 (optional)	6	6 / Hyd.35 (optional)
Clamping Torque		kgf·m	13	70	31	31 / Hyd.55	31	31 / Hyd.55
Servo Motor Model	FANUC	Taper/Straight shaft	αis4 / βis4	αiF8 / βis8	αiF4 / βis8	αiF8 / αis12 / βis12	αiF4 / βis8	αiF8 / αis12 / βis12
	MITSUBISHI	Taper/Straight shaft	HF-KP43JW04-S6 / HG-56	HF/HG-154	HG/HF-54/104	HG/HF-104	HG/HF-54/104	HG/HF-104
Speed Reduction Ratio		-	1 : 60	1 : 120	1 : 90	1 : 90	1 : 90	1 : 90
Max. Rotation Rate of Table (Calculate with Fanuc α Motor)		r.p.m	44.4 *(33.3)	16.6 *(11.1)	33.3 *(33.3)	33.3 *(16.6)	33.3 *(33.3)	33.3 *(16.6)
Allowable Inertia Load Capacity (Horizontal)		kg.cm.sec²	0.8		4.13		4.13	
Allowable Workpiece Load	0° Horizontal	kg	25		75		75	
	0°~90° Tilt	kg	20		50		50	
Allowable Thrust Load (with Rotary Table Clamping)	F	kgf	600		750		750	
	FxL	kgf·m	25		Pne.31 / Hyd.55		Pne.31 / Hyd.55	
	FxL	kgf·m	13		31		31	
Driving Torque (Rotary axis)		kgf·m	9(3.7)		18 *(14.6)		18 *(14.6)	
Net Weight (servo motor excluded)		kg	116		160		163	

*( ) Alloy Steel worm & gear series

*1. Indexing precision can be better after installing an additional angle encoder. Please refer to the table on page 70 for more details.

★ The shown dimensional drawings of FAR-160SN are not suitable for Fanuc but most of servo control. Another dimensional drawing can be given when Fanuc motors are employed.

TJR CNC Rotary Table

CNC Tilting Rotary Tables
Min. indexing angle –0.001°

Driven by Worm & Worm Gear

FHR Series
Dual-axis dual-arm type
(Hydraulic Brake)
FHR(s)-255C/255CL
FHR-320/320C

5 FEATURES

Vertical & Horizontal

Japanese made

1. Both the tilting axis and rotary axis use large-diameter radial & axial bearings.
2. Because the tilting axis normally needs to bear heavy load, Japanese-made worm and worm gear are employed to improve wear resistance and precision of tilting axis. **standard component**
   (It's wear life is **2.6** times longer than aluminum bronze PBC3.)
3. The tilting, supporting, and rotary axis are all equipped with the hydraulic-brake mechanisms. (Employing three independent hydraulic drum-brake systems)
4. Max. tilting angle: **±110°**
5. Anti-wear alloy steel worm gear is optional

Alloy steel worm gear (Optional)





▲ FHR(s)-255C (Cradle type)

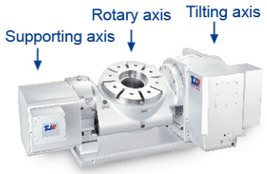

▲ FHR-320 (Standard type)



▲ FHR(s)-255CL (Extended cradle type)



▲ FHR-320C (Cradle type)



▲ Workpiece sample – 5 axis simultaneous contouring

FHR(s)-255C (Cradle type)

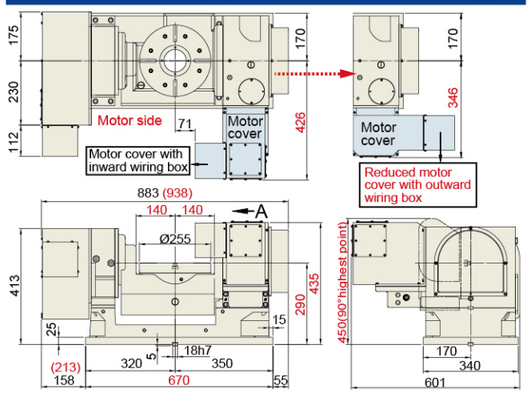

4-port rotary joint can be accommodated.

FHR-255C

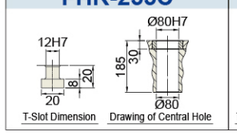

FHR-320

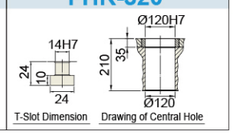

FHR(s)-255CL (Extended cradle type)

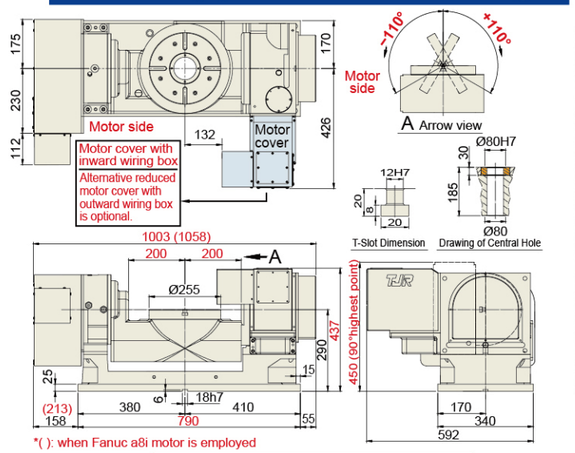

4-port rotary joint can be accommodated.

FHR(s)-320 (Standard type)

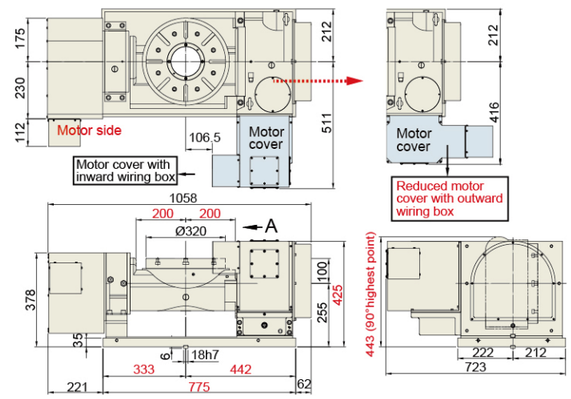

6-port rotary joint can be accommodated.

FHR(s)-320C (Cradle type)

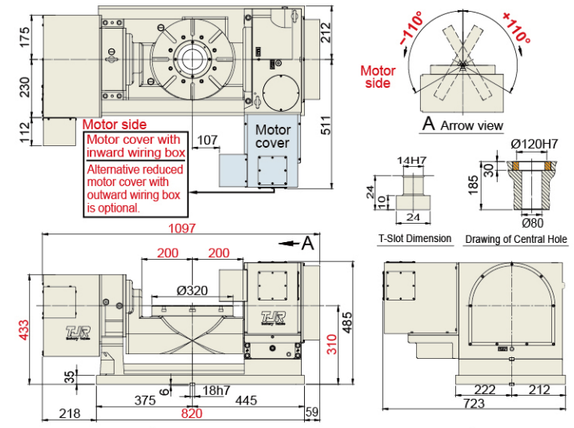

4-port rotary joint can be accommodated.

Item / Model		Unit	FHR(s)-255C / 255CL		FHR-320 (Standard type)		FHR-320C (Cradle type)	
Table Diameter		mm	Ø 255		Ø 320		Ø 320	
Diameter of Table Central Hole		mm	Ø 110		Ø 150		Ø 150	
Inner Diameter of Mandrel Sleeve		mm	Ø 80H7		Ø 120H7		Ø 120H7x30 deep	
Diameter of Center Through Hole		mm	Ø 80		Ø 120		Ø 80	
Table Height (Horizontal)		mm	290		355		310	
Table T-slot Width		mm	12H7		14H7		14H7	
Guide Block Width		mm	18h7		18h7		18h7	
Axis		-	Rotation	Tilt ±110°	Rotation	Tilt ±110°	Rotation	Tilt ±110°
Min. Increment		deg.	0.001	0.001	0.001	0.001	0.001	0.001
Indexing Precision (while tilt 0°~+90°)		sec.	15	60*1	15	50*1	15	60*1
Repeatability		sec.	6	8	6	8	6	8
Clamping System (Hydraulic)		kgf/cm²	35	35	35	35	35	35
Clamping Torque		kgf·m	70	140	115	175	70	175
Servo Motor Model	FANUC	Taper/Straight shaft	αiF4 / αiF8 / αis12 / βis8 (Taper)	αiF8/αis12/βis12(Taper)	αiF8 / αis12 / βis12(Taper)	αiF12 / βis22 (Straight)	αiF8 / αis12 / βis12 (Taper)	αiF12 / βis22 (Straight)
	MITSUBISHI	Straight shaft	HG/HF-104	HG/HF-154	HG/HF-104	HG/HF-204	HG/HF-104	HG/HF-204
Speed Reduction Ratio		-	1 : 120	1 : 120	1 : 120	1 : 120	1 : 120	1 : 120
Max. Rotation Rate of Table (Calculate with Fanuc α Motor)		r.p.m	**33.3 *(25)**	**16.6 *(11.1)**	**25**	**16.6**	**25**	**16.6**
Allowable Inertia Load Capacity (Horizontal)		kg.cm.sec²	8.13		25.6		25.6	
Allowable Workpiece Load	0° Horizontal	kg	100		200		200	
	0°~90° Tilt	kg	75		150		100	
Allowable Thrust Load (with Rotary Table Clamping)	F	kgf	1500		1800		1800	
	FxL	kgf·m	140		175		175	
	FxL	kgf·m	70		115		70	
Driving Torque (Rotary axis)		kgf·m	55 *(31)		80		55	
Net Weight (servo motor excluded)		kg	296(Ø255C) / 312(Ø255CL)		470		489	

*( ) Alloy Steel worm & gear series
*1. Indexing precision can be better after installing an additional angle encoder. Please refer to the table on page 70 for more details.

★ In accordance with the foreign trade control ordinance, permission of the ministry of economy, trade and industry is required when exporting dual-axis products overseas.

CNC Tilting Rotary Tables
Min. indexing angle –0.001°

Driven by Worm & Worm Gear

FHR Series

Dual-axis dual-arm type (Hydraulic Brake)

FHR-400CF
FHR-401C-700-HR400B

4 FEATURES

Vertical & Horizontal



Japanese made

1. Both the tilting axis and rotary axis use large-diameter radial & axial bearings.
2. Because the tilting axis normally needs to bear heavy load, Japanese-made worm and worm gear are employed to improve wear resistance and precision of tilting axis. **standard component**
   (It's wear life is **2.6** times longer than aluminum bronze PBC3.) 〈except for FHR-500C/630C〉
3. Max. tilting angle: **±110°**
4. The tilting, supporting, and rotary axis are all equipped with the hydraulic-brake mechanisms. (Employing three independent hydraulic drum-brake systems)

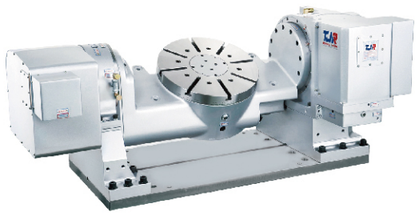

▲ FHR-400CF (Cradle type)



▲ FHR-400C-540-HR400B (Cradle type)

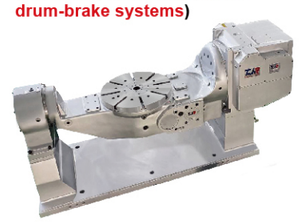

▲ FHR-401C-820-HR400B (Single plate)

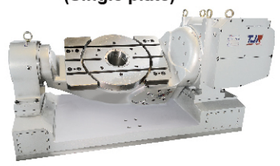

▲ FHR-401C-820-3-HR400B (Three plates)

Item / Model		Unit	FHR-400CF (Cradle type)		FHR-400C-540-HR400B (Cradle type)		FHR-401C-820-HR400B (Cradle type)	
Table Diameter		mm	Ø 400		Ø 400		Ø 400	
Diameter of Table Central Hole		mm	Ø150H7		Ø150H7		Ø150H7	
Inner Diameter of Mandrel Sleeve		mm	Ø 120H7x40 deep		Ø 120H7x35 deep		Ø 120H7x35 deep	
Diameter of Center Through Hole		mm	Ø 120		Ø 120		Ø 105	
Table Height (Horizontal)		mm	430		380		410	
Table T-slot Width		mm	14H7		14H7		14H7	
Guide Block Width		mm	18h7		18h7		18h7	
Axis		-	Rotation	Tilt ±110°	Rotation	Tilt ±110°	Rotation	Tilt ±110°
Min. Increment		deg.	0.001	0.001	0.001	0.001	0.001	0.001
Indexing Precision (while tilt 0°~+90°)		sec.	15	60*1	15	60*1	15	60*1
Repeatability		sec.	6	8	6	8	6	8
Clamping System (Hydraulic)		kgf/cm²	35	35	35	35	35	35
Clamping Torque		kgf·m	115	175	115	275	115	275
Servo Motor Model	FANUC	Taper/Straight shaft	αiF8/αis12/ßis12(Straight)	αiF12/ßis22(Straight)	αis12	αiF22	αiF8/αis12/ßis12(Taper)	αiF22 / ßis22(Straight)
	MITSUBISHI	Straight shaft without key	HG/HF-154	HG/HF-354	HF/HG-154	HF/HG-354	HF/HG-154	HF/HG-354
Speed Reduction Ratio		-	1 : 120	1 : 120	1 : 120	1 : 120	1 : 120	1 : 120
Max. Rotation Rate of Table (Calculate with Fanuc α Motor)		r.p.m	**25**	**16.6**	**25**	**16.6**	**25**	**16.6**
Allowable Inertia Load Capacity (Horizontal)		kg.cm.sec²	40		44		44	
Allowable Workpiece Load	0° Horizontal	kg	200		220		220	
	0°~90°Tilt	kg	100		120		120	
Allowable Thrust Load (with Rotary Table Clamping)	F	kgf	1800		1800		1800	
	FxL	kgf·m	175		275		275	
	FxL	kgf·m	115		115		115	
Driving Torque(Rotary axis)		kgf·m	80		80		80	
Net Weight (servo motor excluded)		kg	818		702		958	

*1. Indexing precision can be better after installing an additional angle encoder. Please refer to the table on page 70 for more details.

★ In accordance with the foreign trade control ordinance, permission of the ministry of economy, trade and industry is required when exporting dual-axis products overseas.

Driven by Worm & Worm Gear

FHR-400CF (Cradle type)

The model is recommended for workpiece made of light material such as aluminum or copper.

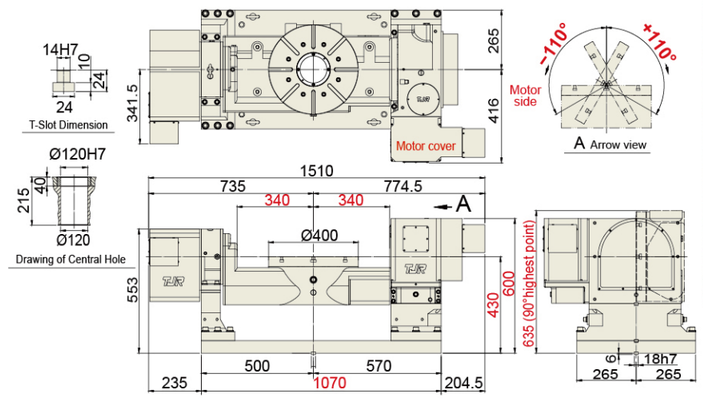

FHR-400C-540-HR400B (cradle type)

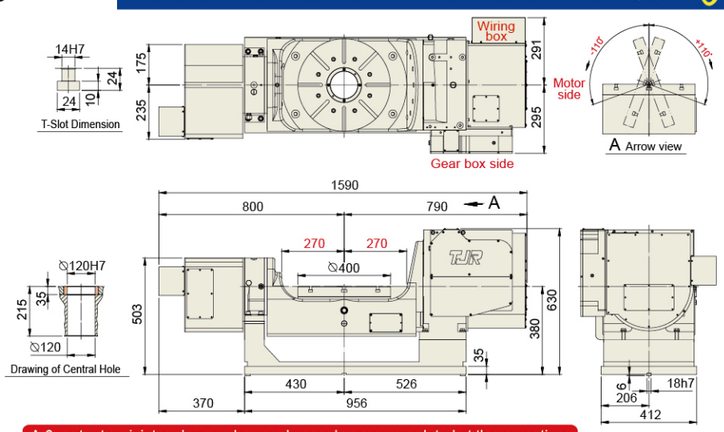

A 6-port rotary joint and an angle encoder can be accommodated at the same time.

FHR-401C-820-HR400B (cradle type)

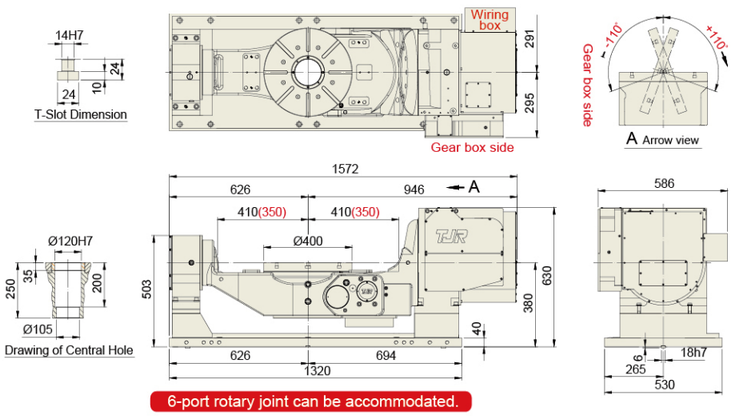

6-port rotary joint can be accommodated.

TJR CNC Rotary Table

CNC Tilting Rotary Tables
Min. indexing angle –0.001°

Driven by Worm & Worm Gear

FHR Series

Dual-axis dual-arm type
(Hydraulic Brake)

FHR-500C / FHR-650C

4 FEATURES

Vertical & Horizontal

Japanese made

1. Both the tilting axis and rotary axis use large-diameter radial & axial bearings.
2. Because the tilting axis normally needs to bear heavy load, Japanese-made worm and worm gear are employed to improve wear resistance and precision of tilting axis. standard component
(It's wear life is 2.6 times longer than aluminum bronze PBC3.) (except for FHR-500C/630C)
3. The tilting, supporting, and rotary axis are all equipped with the hydraulic-brake mechanisms. (Employing three independent hydraulic drum-brake systems)
4. Max. tilting angle: ±110°



FHR-500C
(dual-arm, cradle type)



FHR-650C
(dual-arm, cradle type)

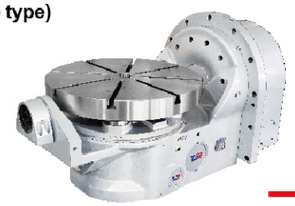

FCHR-650S-550
(Single-arm, pallet change type)

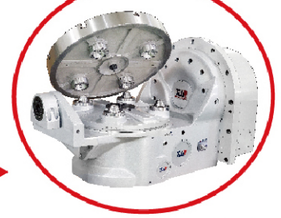

(pallet change type)





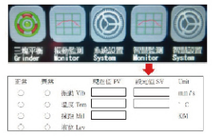

Artificial intelligence (AI) rotary table provides 4 foolproof functions to save your money and time.

FHR-500C (Dual-arm / Cradle type)

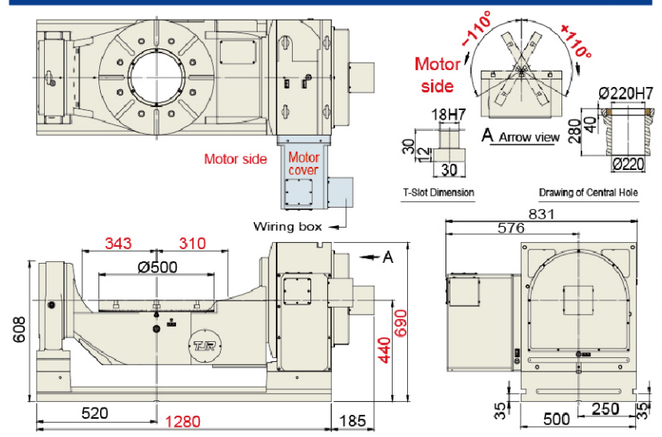

FHR-650C (Dual-arm / Cradle type)

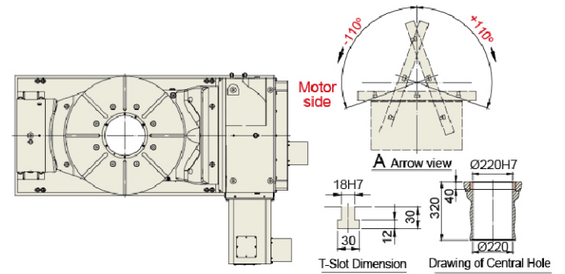

FCHR-650S-550 (pallet change type)

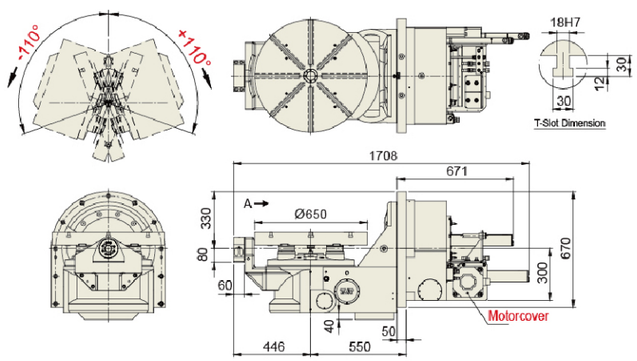

Item / Model		Unit	FHR-500C(dual-arm, cradle type)		FHR-650C(dual-arm, cradle type)		FCHR-650S-550(Single-arm, pallet change type)	
Table Diameter		mm	Ø500		Ø650		Ø650	
Diameter of Table Central Hole		mm	Ø250x40 deep		Ø250x40 deep		-	
Inner Diameter of Mandrel Sleeve		mm	Ø220H7		Ø220H7		Ø50H7x27 deep	
Diameter of Center Through Hole		mm	Ø220		Ø220		-	
Table Height (Horizontal)		mm	440		480		-	
Table T-slot Width		mm	18H7		18H7		18H7	
Guide Block Width		mm	18h7		18h7		-	
Axis		-	Rotation	Tilt ±110°	Rotation	Tilt ±110°	Rotation	Tilt ±110°
Min. Increment		deg.	0.001	0.001	0.001	0.001	0.001	0.001
Indexing Precision (while tilt 0°~+90°)		sec.	15	60*1	15	60*1	15*1	60*1
Repeatability		sec.	6	8	6	8	6	8
Clamping System (Hydraulic)		kgf/cm^2	35	35	35	35	35	35
Clamping Torque		kgf·m	370	410	370	800	370	500
Servo Motor Model	FANUC	Straight shaft	αiF12 / βis22	αiF22 / βis30	αiF12	αiF30	αiF12	αiF40
	MITSUBISHI	Straight shaft	HG/HF-204	HG/HF-354	HG/HF-204	HG/HF-703	HG/HF-204	HG/HF-703
Speed Reduction Ratio		-	1 : 120	1 : 180	1 : 120	1 : 180	1 : 120	1 : 150
Max. Rotation Rate of Table (Calculate with Fanuc α Motor)		r.p.m	**25**	11.1	**25**	11.1	25	13.3
Allowable Inertia Load Capacity (Horizontal)		kg.cm.sec^2	93.75		158.4		154.8	
Allowable Workpiece Load	0° Horizontal	kg	500		500		250	
	0°~90°Tilt	kg	300		400		250	
Allowable Thrust Load (with Rotary Table Clamping)	F	kgf	3000		3200		-	
	FxL	kgf·m	410		800		500	
	FxL	kgf·m	370		370		370	
Driving Torque (Rotary axis)		kgf·m	250		250		250	
Net Weight (servo motor excluded)		kg	1091		1867		1434 (including 2 pallets)	

*1. Indexing precision can be better after installing an additional angle encoder. Please refer to the table on page 70 for more details.

★ In accordance with the foreign trade control ordinance, permission of the ministry of economy, trade and industry is required when exporting dual-axis products overseas.

★ Two pallets is the standard offer. If you need more pallets, please consult with TJR.

★ It excludes the pallet change mechanism which should be designed and manufactured by the machine tool manufacturers.

CNC Tilting Rotary Tables
Min. indexing angle –0.001°

Driven by Worm & Worm Gear

FHR Series
Dual-axis single-arm type
(Hydraulic Brake)

FHR-400S
FHR-650S-525
FHR-650S-550

Vertical & Horizontal



FHR-400S ▲



▲ FHR-650S-525

The illustration of additional supporting seat whose thickness can be tailor-made

The supporting seat bracket (Made by the buyer [machine tool builder])

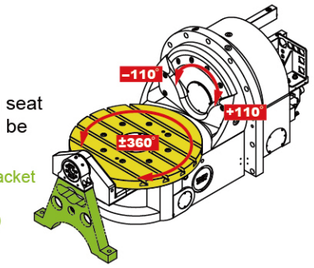

Item / Model		Unit	FHR-400S		FHR-650S-525 / 550	
Table Diameter		mm	Ø 400		Ø 650	
Diameter of Table Central Hole		mm	-		-	
Inner Diameter of Mandrel Sleeve		mm	Ø 120H7x35 deep		-	
Diameter of Center Through Hole		mm	Ø 105		-	
Table Height (Horizontal)		mm	-		-	
Table T-slot Width		mm	14H7		18H7	
Guide Block Width		mm	-		-	
Axis		-	Rotation	Tilt ±110°	Rotation	Tilt ±110°
Min. Increment		deg.	0.001	0.001	0.001	0.001
Indexing Precision (while tilt 0°~+90°)		sec.	15	60	15	60*1
Repeatability		sec.	6	8	6	8
Clamping System (Hydraulic)		kgf/cm²	35	35	35	35
Clamping Torque		kgf·m	115	200	370	500
Servo Motor Model	FANUC	-	αis12	αiF22 (Straight)	αiF12	αiF40 (Straight)
	MITSUBISHI	Straight shaft	HG/HF-154	HG/HF-354	HF-204	HF-703
Speed Reduction Ratio		-	1：120	1：150	1：120	1：150
Max. Rotation Rate of Table (Calculate with Fanuc α Motor)		r.p.m	25	13.3	25	13.3
Allowable Inertia Load Capacity (Horizontal)		kg.cm.sec²	44		158.4	
Allowable Workpiece Load	0°Horizontal	kg	220		500	
	0°~90°Tilt	kg	120		300	
Allowable Thrust Load (with Rotary Table Clamping)	F	kgf	1800		-	
	FxL	kgf·m	200		500	
	FxL	kgf·m	115		370	
Driving Torque (Rotary axis)		kgf·m	80		250	
Net Weight (servo motor excluded)		kg	482		1120	

*1. Indexing precision can be better after installing an additional angle encoder.
Please refer to the table on page 70 for more details.
★ In accordance with the foreign trade control ordinance, permission of the ministry of economy, trade and industry is required when exporting dual-axis products overseas.

TJR CNC Rotary Table

Driven by Worm & Worm Gear



▲ FHR-650S-550

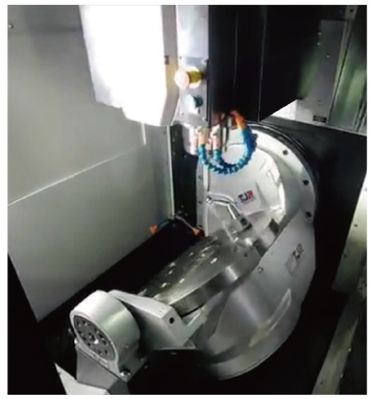



Please see page 57 & 58
for FHR-350F-2W-RC320-2A

FHR-400S

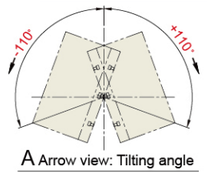

A Arrow view: Tilting angle

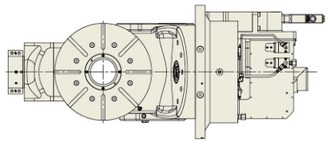

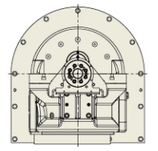

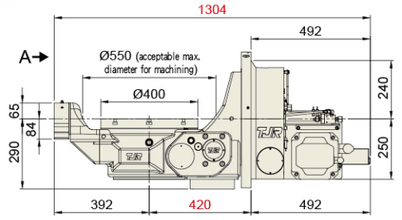



Drawing of Central Hole

FHR-650S-525 (Dual-axis single-arm type (Hydraulic Brake))

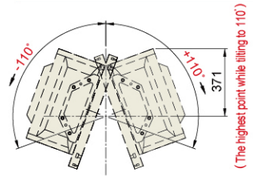

A Arrow view: Tilting angle

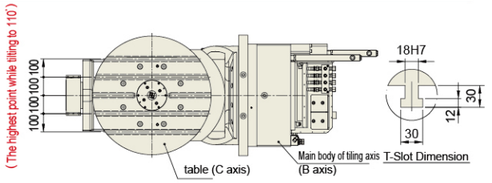

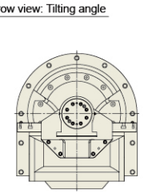

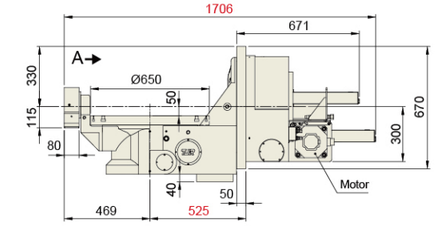

FHR-650S-550 (Dual-axis single-arm type (Hydraulic Brake))

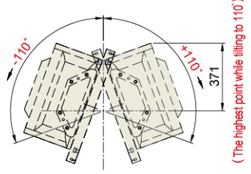

A Arrow view: Tilting angle

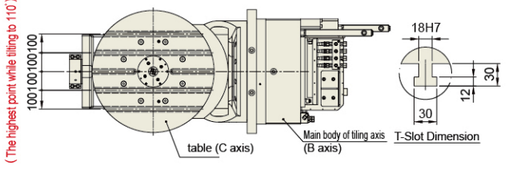

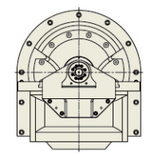

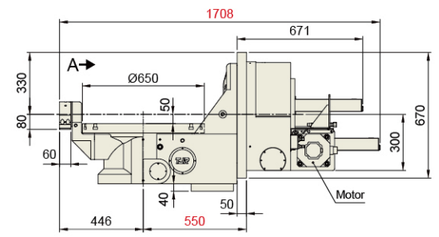

Driven by Worm & Worm Gear

CURC series

(Hook type CNC auto pallet changer)

CURC-500x700

(Table size can be customized)(180° to and fro)

For C type vertical machining center or drilling & tapping center

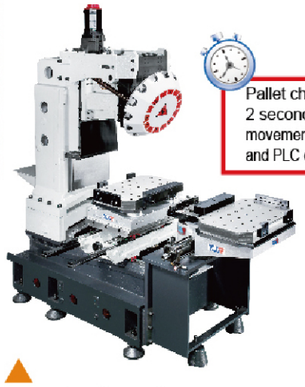

Pallet changing time is around 2 seconds,which excludes the movements of the plate rise & fall and PLC delayed time of machine.

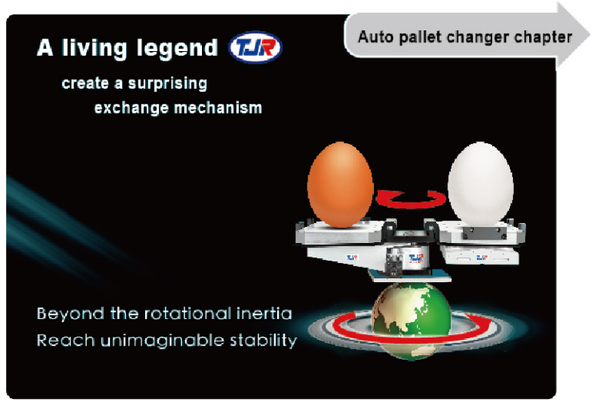

▲ **Application diagram: retrofits vertical machining center with CURC-500x700**

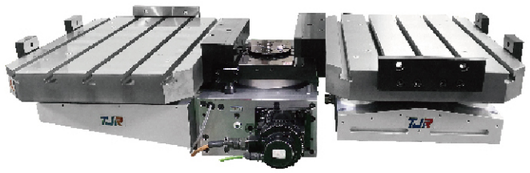

▲ **CURC-500x700**
(Hook type CNC auto pallet changer)
Driven by Roller Gear Cam

Item / Model		Unit	CURC-500x700
Lift-up mechanism		-	Hook type (U type)
Table size		mm	500 x 700
Rotation method		-	Servo motor
Rotation angle		deg.	180° to and fro
Clamping System (Hydraulic)		kgf/cm²	35
Positioning method		-	Cone positioning
Clamping force(35kg/cm²)		kgf	960x4=3840
Operating System (Up&Down&Rotate)		kgf/cm²	Hyd.35
Lifting thrust force		kgf	2200
Up and down travel of the pallet		mm	60
Servo Motor Model	FANUC	Straight shaft	βis12
	DELTA		ECMA-E 1320GS
	MITSUBISHI		HG-224
Speed Reduction Ratio		-	1 : 90
Allowable Workpiece Load	Horizontal	kg	250x2=500
Inspection accuracy			
Repeatability accuracy on positioning of the same pallet		mm	0.01
Max. positioning tolerance for 2 pallets		mm	0.02
Parallelism of pallet top and base bottom		mm	0.02
Net weight of saddle and one faceplate		kg	712

Driven by Roller Gear Cam

CURC-500x700 (Hook type auto pallet changer)

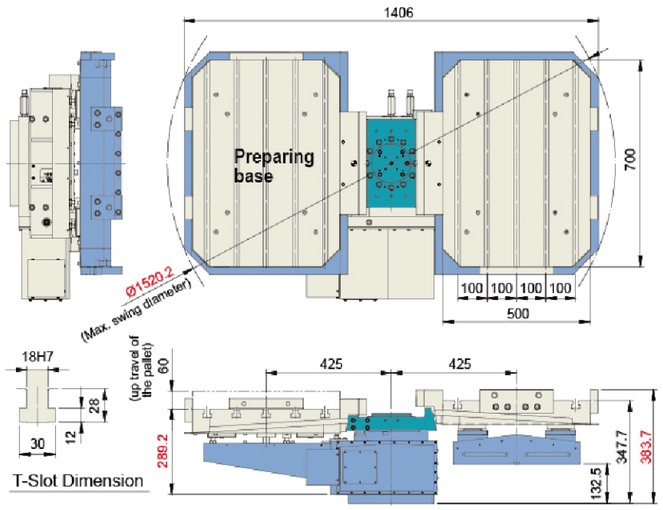

Driven by Worm & Worm Gear

CTU series

(Hook type auto pallet changer)

CTU-400x600 / 500x700

(Table size can be customized)(180° to and fro)

For C type vertical machining center or drilling & tapping center



▲ **CTU-500x700 (hook type APC)**

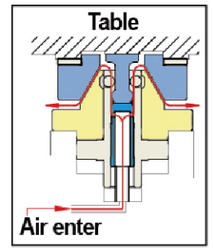



▲ The function of cones :
①Precise positioning
②Air blast for chip removal
③Airtight testing

▲ Cones:
Powerful hydraulic clamping

Pallet changing time is around 6 seconds,which excludes PLC delayed time of machine

The location of CTU can vary, depending on the machine design & dimensions.

Green color section should be made by the buyer (machine tool builder)

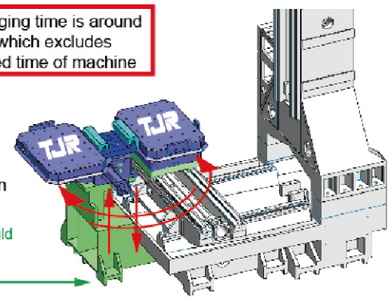

▲ **Application diagram: retrofits vertical machining center with CTU**

CTU-400x600 (The type of hook plate fixed on the exchanging mechanism.)

(Weight : 530kg)

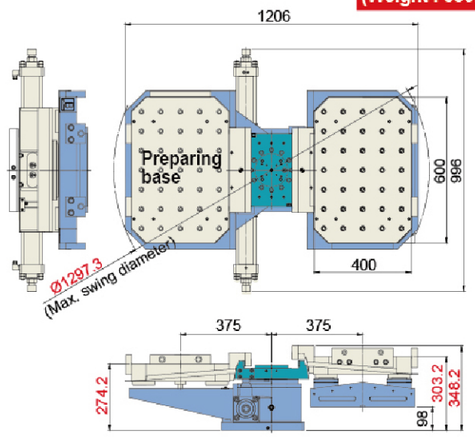

CTU-500x700 (The type of hook plate fixed on the exchanging mechanism.)

(Weight : 603kg)

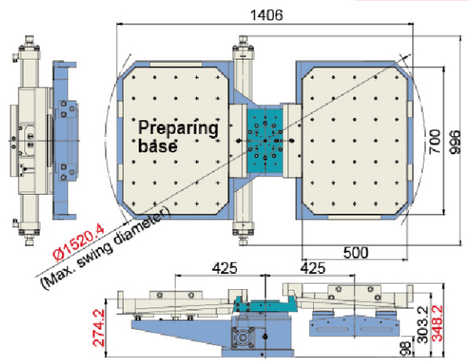

Item / Model		Unit	CTU-400x600	CTU-500x700
Lift-up mechanism		-	Hook type (U type)	Hook type (U type)
Table size		mm	□ 400 x 600	□ 500 x 700
Rotation method		-	Hydraulic hirth coupling	Hydraulic hirth coupling
Rotation angle		deg.	180° to and fro	180° to and fro
Clamping System (Hydraulic)		kgf/cm²	35	35
Positioning method		-	Cone positioning	Cone positioning
clamping force of positioning cones	(35kg/cm²)	kgf	960x4=3840	960x4=3840
Operating System(Up & Down & Rotate)		kgf/cm²	Hyd.45	Hyd.45
Lifting thrust force		kgf	2860	2860
Up and down travel of the pallet		mm	60	60
Allowable Workpiece Load	Horizontal	kg	250x2=500	250x2=500
Inspection accuracy				
Repeatability accuracy on positioning of the same pallet		mm	0.01	
Max. positioning tolerance for 2 pallets		mm	0.02	
Parallelism of pallet top and base bottom		mm	0.02	

Driven by Worm & Worm Gear

CHI/CHR Series

(Dual pallets rotary table)

CHI-400 (1° or 5°) Hirth coupling hydraulic brake

CHR-400 (0.001°) Hydraulic Brake

For horizontal machining center

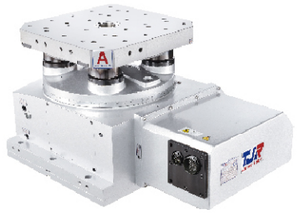

▲ **CHI-400 (1°)- Dual pallets rotary table**
(Flat bottom type)

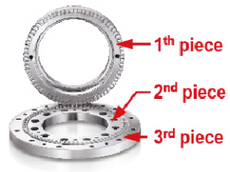



▲ **CHI Series：**
Use three-piece clutch plate

Function: ①Accuracy: ±5 seconds
②Rotate without lifting the table to prevent table from water and particles.

▲ **CHR series：**
Use large-diameter radial & axial bearings

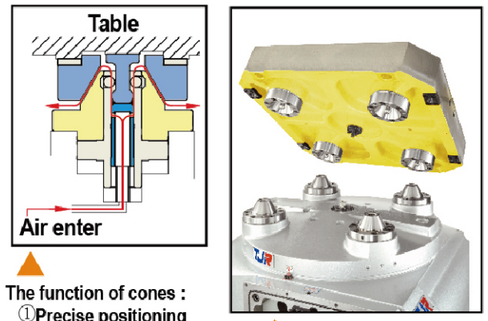

▲ The function of cones :
①Precise positioning
②Air blast for chip removal
③Airtight testing

▲ Cones:
Powerful hydraulic clamping

CHI-400 (1° or 5°) (Flat bottom type)

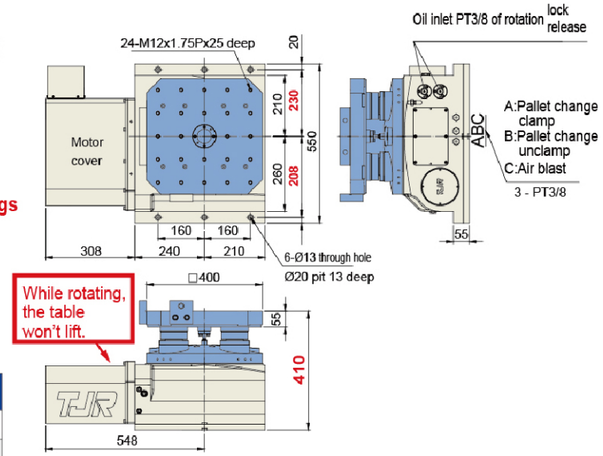

CHR-400 (0.001°) (Flat bottom type)

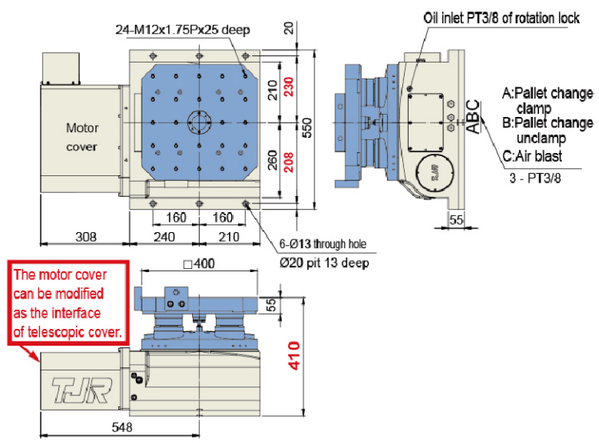

Item / Model	Unit	CHI-400	CHR-400
Table size	mm	□400x400	□400x400
Diameter of Table Central Hole	mm	Ø50x27 deep	Ø50x27 deep
Table height	mm	410	410
Table T-slot Width	mm	14H7	14H7
Guide Block Width	mm	18h7	18h7
Min. Increment	deg.	1 or 5	0.001
Indexing Precision	sec.	±5	15
Repeatability	sec.	±1	6
Clamping force of positioning cones	kgf	960x4=3840	960x4=3840
Clamping System (Hydraulic)	kgf/cm²	35	35
Clamping Torque	kgf·m	500	200
Servo Motor Model FANUC	Straight shaft	αiF12 / βis22	αiF12 / βis22
Servo Motor Model MITSUBISHI	without key	HG/HF-204	HG/HF-204
Speed Reduction Ratio	-	1 : 120	1 : 120
Max. Rotation Rate of Table (Calculate with Fanuc α Motor)	r.p.m	25	25
Allowable Workpiece Load Horizontal	kg	400	400
Driving Torque	kgf·m	-	170
Net Weight (servo motor excluded)	kg	410	-

TJR CNC Rotary Table
Exquisite Products of Taiwan. Extreme Ingenuity

Driven by Worm & Worm Gear

CTH Series

(Tray type auto pallet changer)

CTH-400 (Go with CHI/CHR series)

For horizontal machining center

(180° to and fro)



▲ **CTH-400 (Tray type APC)**

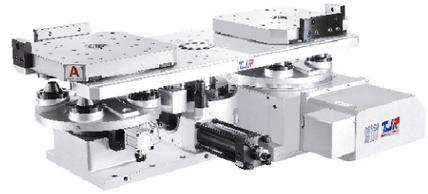

▲ **CTH-400 + CHI-400**
Tray type APC + Dual pallets rotary table
(Flat bottom type)

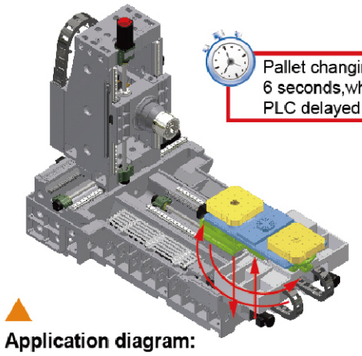

Pallet changing time is around 6 seconds,which excludes PLC delayed time of machine

▲ **Application diagram:**
retrofits horizontal machining center with CTH+ CHI

CTH-400 (Pallet changer)

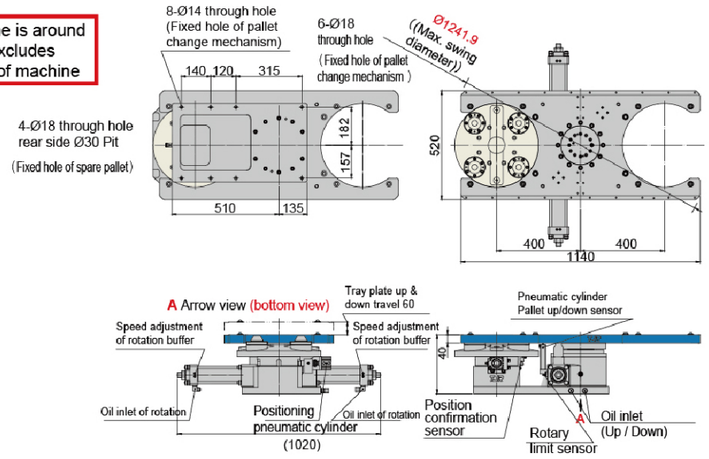

Item / Model	Unit	CTH-400
Lift-up mechanism	-	Tray type (H type)
Table size	mm	520 x 1140
Rotation method	-	Hydraulic hirth coupling
Rotation angle	deg.	180° to and fro
Clamping System (Hydraulic)	kgf/cm²	35
Positioning method	-	Cone positioning
Clamping force (35kg/cm²)	kgf	960x4=3840
Operating System(Up & Down & Rotate)	kgf/cm²	Hyd.35
Lifting thrust force	kgf	2200
Up and down travel of the pallet	mm	60
Allowable Workpiece Load Horizontal	kg	400x2=800
Inspection accuracy		
Repeatability accuracy on positioning of the same pallet	mm	0.01
Max. positioning tolerance for 2 pallets	mm	0.02
Parallelism of pallet top and base bottom	mm	0.02

CTH-400 + CHI-400 (Flat bottom type)

(Weight : 335kg)

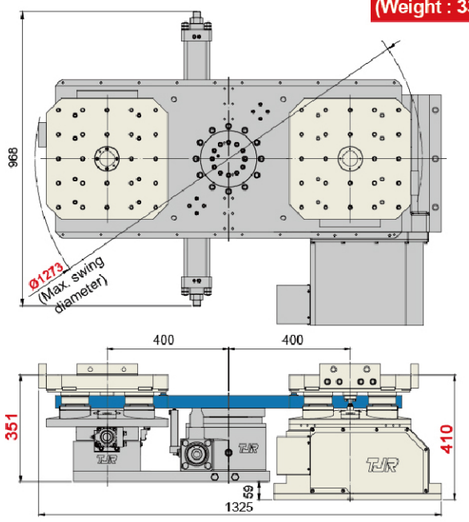

Driven by Worm & Worm Gear

CHI/CHR Series

(Dual pallets rotary table)

CHI -500 (1°or 5°) Hirth coupling hydraulic brake

CHR-500 (0.001°) Hydraulic Brake

For horizontal machining center



▲ CHI-500 (1°)- Dual pallets rotary table (Flat bottom type)

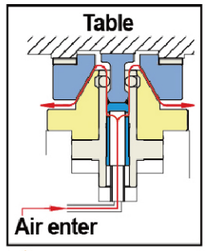

▲ The function of cones :
①Precise positioning
②Air blast for chip removal
③Airtight testing



▲ Cones: Powerful hydraulic clamping

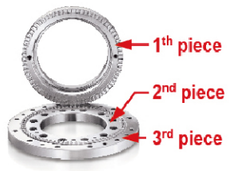



▲ CHI Series : Use three-piece clutch plate
Function: ①Accuracy: ±5 seconds
②Rotate without lifting the table to prevent table from water and particles.

▲ CHR series : Use large-diameter radial & axial bearings

CHI-500 (1° or 5°) (Flat bottom type)

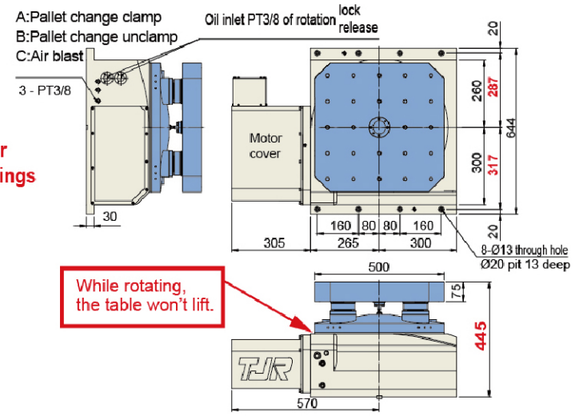

CHR-500 (0.001°) (Flat bottom type)

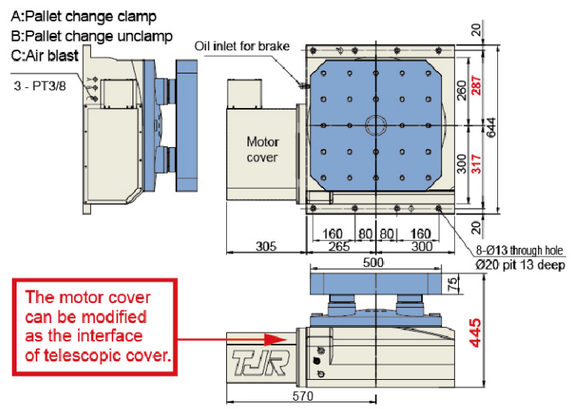

Item / Model		Unit	CHI-500	CHR-500
Table size		mm	□500x500	□500x500
Diameter of Table Central Hole		mm	Ø50x27 deep	Ø50x27 deep
Table height		mm	445	445
Table T-slot Width		mm	18H7	18H7
Guide Block Width		mm	18h7	18h7
Min. Increment		deg.	1 or 5	0.001
Indexing Precision		sec.	±5	15
Repeatability		sec.	±1	6
Clamping force of positioning cones (35kg/cm²)		kgf	960x4=3840	960x4=3840
Clamping System (Hydraulic)		kgf/cm²	35	35
Clamping Torque		kgf·m	1000	370
Servo Motor Model	FANUC	Straight shaft without key	βis22	αiF12 / βis22
	MITSUBISHI		HG/HF-204	HG/HF-204
Speed Reduction Ratio		-	1 : 180	1 : 180
Max. Rotation Rate of Table (Calculate with Fanuc α Motor)		r.p.m	16.6	16.6
Allowable Workpiece Load	Horizontal	kg	600	600
Driving Torque		kgf·m	-	250
Net Weight (servo motor excluded)		kg	716 (including 2 pallets)	-

TJR CNC Rotary Table
Exquisite Products of Taiwan. Extreme Ingenuity

Driven by Worm & Worm Gear

CTH Series

(Tray type auto pallet changer)

CTH-500 (Go with CHI/CHR series)

For horizontal machining center

(180° to and fro)



▲ CTH-500 (Tray type APC)



▲ CTH-500 + CHI-500
Tray type APC + Dual pallets rotary table (Flat bottom type)

Pallet changing time is around 6 seconds,which excludes PLC delayed time of machine

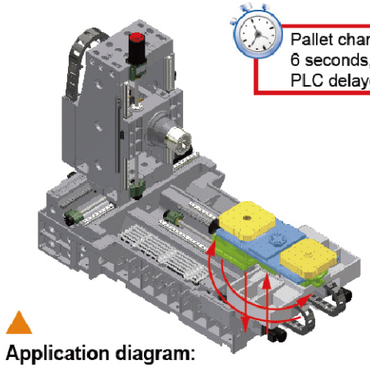

▲ Application diagram: retrofits horizontal machining center with CTH+ CHI

CTH-500 (Pallet changer)

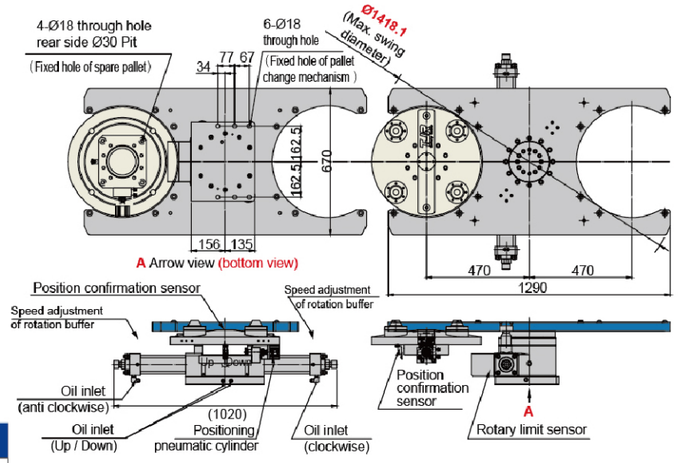

Item / Model	Unit	CTH-500
Lift-up mechanism	-	Tray type (H type)
Table size	mm	670 x 1290
Rotation method	-	Hydraulic hirth coupling
Rotation angle	deg.	180° to and fro
Clamping System(Hydraulic)	kgf/cm²	35
Positioning method	-	Cone positioning
Clamping force (35kg/cm²)	kgf	960x4=3840
Operating System(Up & Down & Rotate)	kgf/cm²	Hyd.45
Lifting thrust force	kg	2860
Up and down travel of the pallet	mm	60
Allowable Workpiece Load Horizontal	kg	500x2=1000
Inspection accuracy		
Repeatability accuracy on positioning of the same pallet	mm	0.01
Max. positioning tolerance for 2 pallets	mm	0.02
Parallelism of pallet top and base bottom	mm	0.02

CTH-500 + CHI-500 (Flat bottom type)

(Weight : 400kg)

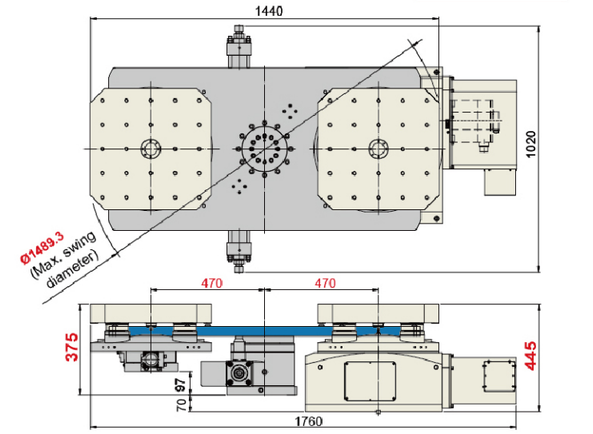

CHI/CHR Series

(Dual pallets rotary table)

CHI-630L(1°or5°) Hirth coupling hydraulic brake

CHR-630L(0.001°) Hydraulic Brake

For horizontal machining center

Driven by Worm & Worm Gear



▲ **CHI-630L (1°)- Dual pallets rotary table**
(Integrated ball-screw-interface type)



▲ **CHI Series :**
Use three-piece clutch plate
Function: ①Accuracy: ±5 seconds
②Rotate without lifting the table to prevent table from water and particles.

▲ **CHR series :**
Use large-diameter radial & axial bearings

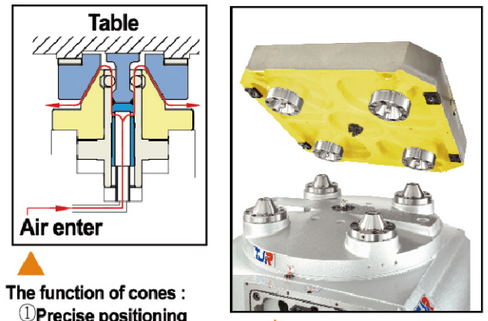

▲ The function of cones :
①Precise positioning
②Air blast for chip removal
③Airtight testing

▲ Cones:
Powerful hydraulic clamping

CHI-630L (1° or 5°) Integrated ball-screw-interface type

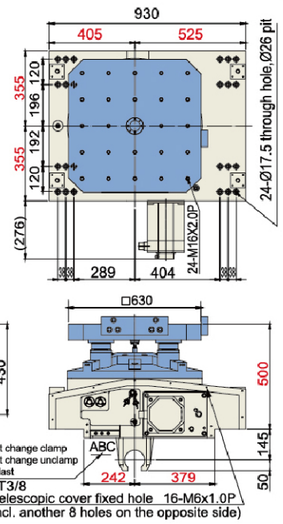

CHR-630L (0.001°) Integrated ball-screw-interface type

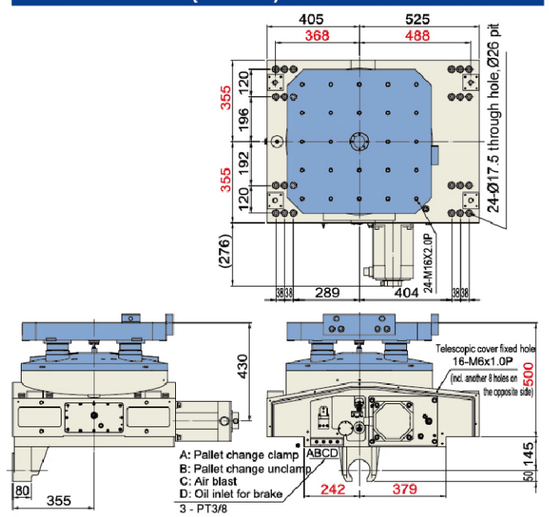

Item / Model		Unit	CH I-630L	CHR-630L
Table size		mm	□630x630	□630x630
Diameter of Table Central Hole		mm	Ø50x27 deep	Ø50x27 deep
Table height		mm	500	500
Table T-slot Width		mm	-	-
Guide Block Width		mm	-	-
Min. Increment		deg.	1 or 5	0.001
Indexing Precision		sec.	±5	15
Repeatability		sec.	±1	6
Clamping force of positioning cones (35kg/cm²)		kgf	940x4=3840	940x4=3840
Clamping System (Hydraulic)		kgf/cm²	35	35
Clamping Torque		kg·m	5000	800
Servo Motor Model	FANUC	Straight shaft without key	βis22	αiF22 / βis22
	MITSUBISHI		HG/HF-204	HG/HF-204
Speed Reduction Ratio		-	1 : 180	1 : 180
Max. Rotation Rate of Table (Calculate with Fanuc α Motor)		r.p.m	16.6	16.6
Allowable Workpiece Load	Horizontal	kg	1200	1200
Driving Torque		kgf·m	-	420
Net Weight (servo motor excluded)		kg	1135	-

CTH Series

(Tray type auto pallet changer)

CTH-630 (Go with CHI/CHR series)

For horizontal machining center

(180° to and fro)

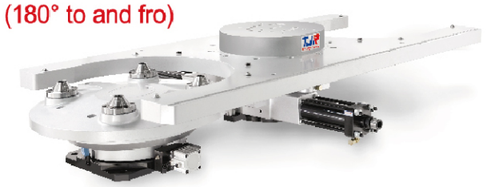

▲ **CTH-630** (Tray type APC)



▲ **CTH-630 + CH I-630L**
Tray type APC + Dual pallets rotary table
(Integrated ball-screw-interface type)

Driven by Worm & Worm Gear

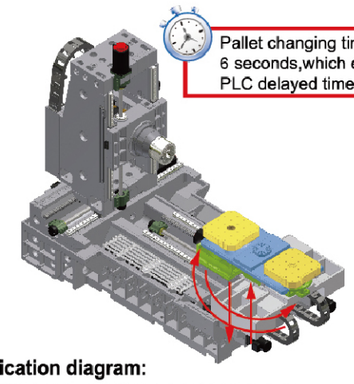

Pallet changing time is around 6 seconds,which excludes PLC delayed time of machine

▲ **Application diagram:**
retrofits horizontal machining center with CTH+ CHR

CTH-630 (Pallet changer)

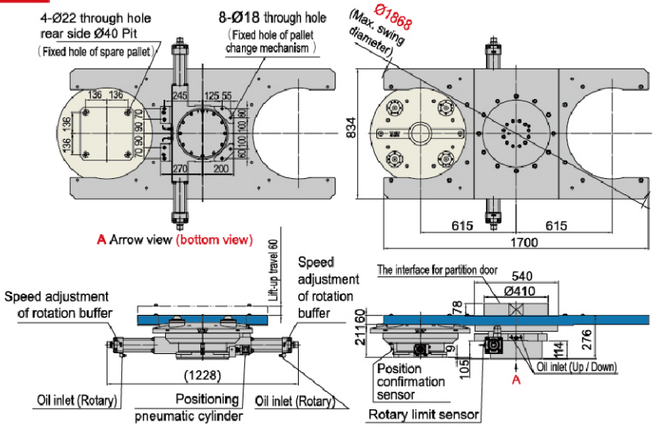

Item / Model	Unit	CTH-630
Lift-up mechanism	-	Tray type (H type)
Table size	mm	834 x 1700
Rotation method	-	Hydraulic hirth coupling
Rotation angle	deg.	180° to and fro
Clamping System (Hydraulic)	kgf/cm²	35
Positioning method	-	Cone positioning
Clamping force (35kg/cm²)	kgf	960x4=3840
Operating System(Up & Down & Rotate)	kgf/cm²	Hyd.45
Lifting thrust force	kg	3780
Up and down travel of the pallet	mm	60
Allowable Workpiece Load Horizontal	kg	1000x2=2000
Inspection accuracy		
Repeatability accuracy on positioning of the same pallet	mm	0.01
Max. positioning tolerance for 2 pallets	mm	0.02
Parallelism of pallet top and base bottom	mm	0.02

CTH-630 + CH I-630L Integrated ball-screw-interface type

(Weight : 600kg)

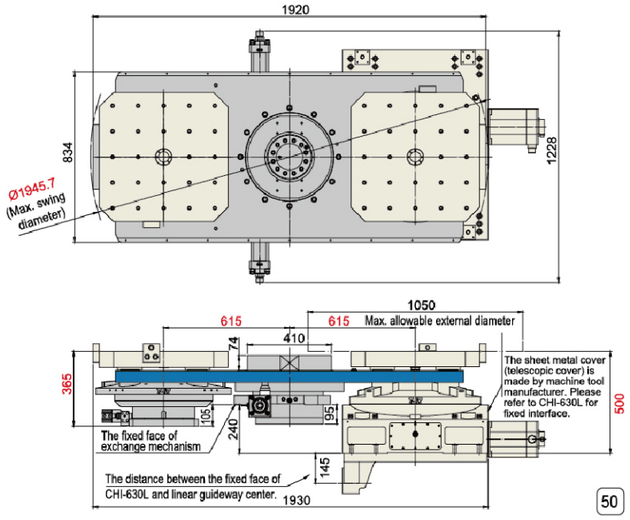

The 4th Axis Roller Gear Cam Series

- Pneumatic Brake / Hydraulic Brake

VERTICAL HORIZONTAL


RC-170R


RC-255N


RC-320N


RC-400N

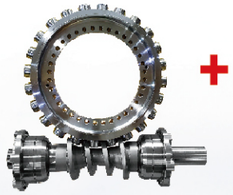

Use radial & axial bearings

Driven by Roller Gear Cam
(Speed : 80 rpm)

A simplified 4th& 5th axis rotary table
Tilt axis: roller gear cam or DD motor rotary table Rotary axis: 90˚ indexer

It can do five face machining without employing a standard 4th & 5th axis rotary table.

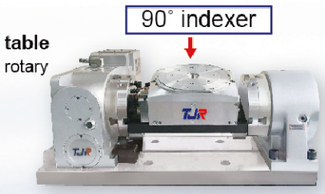

Item		Unit	RC-170R	RC-210R	RC-255R(N)	RC-320R(N) / 320L	RC-400
Table Diameter		mm	Ø170	Ø210	Ø255	Ø320	Ø400
Diameter of Table Central Hole		mm	Ø67	Ø67	Ø110	Ø150	Ø150
Inner Diameter of Mandrel Sleeve		mm	Ø40H7	Ø40H7	Ø80H7	Ø120H7	Ø120H7
Diameter of Center Through Hole		mm	Ø40	Ø40	Ø80 Big Bore	Ø120 Big Bore	Ø120 Big Bore
Center Height (Vertical)		mm	135	160	160	210	255
Table Height (Horizontal)		mm	152	152	200	235	250
Table T-slot Width		mm	12H7	12H7	12H7	14H7	14H7
Guide Block Width		mm	18h7	18h7	18h7	18h7	18h7
Min. Increment		deg.	0.001	0.001	0.001	0.001	0.001
Indexing Precision		sec.	30	30	20	20	20
Repeatability		sec.	8	8	6	6	6
Clamping System (Pneumatic / Hydraulic)		kgf/cm^2	Pne.6	Pne.6 / Hyd.35(Optional)	Hyd.35	Hyd.35	Hyd.35
Clamping Torque		kgf·m	31	31 (Pne.) / 50 (Hyd.)	70	115	200
Servo Motor Model	FANUC	Taper shaft	αiF8 / βis8	αiF8 / βis8	αiF8 / βis12 (Taper)	αiF12 / βis22 (Straight)	αiF12 / βis22 (Straight)
	MITSUBISHI	Taper/Straight shaft	HG/HF-54 / 104	HG/HF-54 /104	HG/HF-154	HG/HF-204	HG/HF-204 (Straight)
Speed Reduction Ratio		-	1 : 36	1 : 36	1 : 60	1 : 90	1 : 90
Max. Rotation Rate of Table (Calculate with FANUC αMotor)		r.p.m	83.3	83.3	50	33.3	33.3
Allowable Inertia Load Capacity (Horizontal)		$kg·cm·sec^2$	5.4	8.3	20.3	44.8	100
Allowable Workpiece Load (dynamic)	Vertical	kg	75	75	100	150	200
	with Tailstock	kg	150	150	250	350	500
	Horizontal	kg	150	150	250	350	500
Allowable Load (with clamping)	F	kgf	1450	1450	2000	3000	4000
	FxL	kgf·m	110	110	150	300	400
	FxL	kgf·m	31	31 (Pne.) / 50 (Hyd.)	70	115	200
Driving Torque		kgf·m	14	14	35	56	73.5
Net Weight (Servo motor excluded)		kg	44	52	110	187	-

TJR CNC Rotary Table
Exquisite Products of Taiwan. Extreme Ingenuity

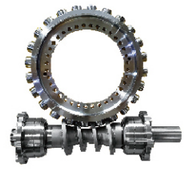





▲ HRC-400-SP

RC-210R

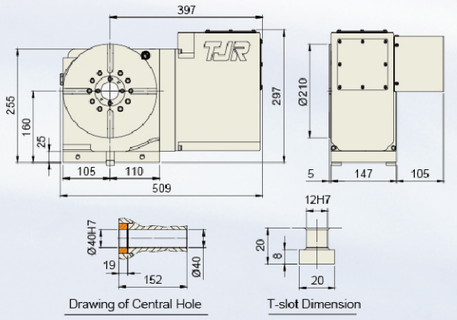

RC-320N (Sheet Metal Cover Reduction)

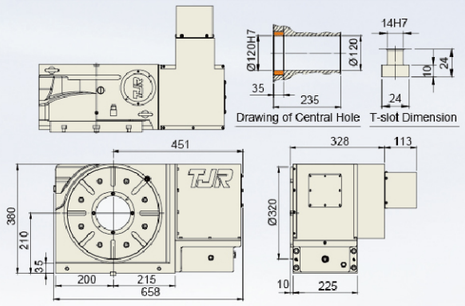

RC-400N

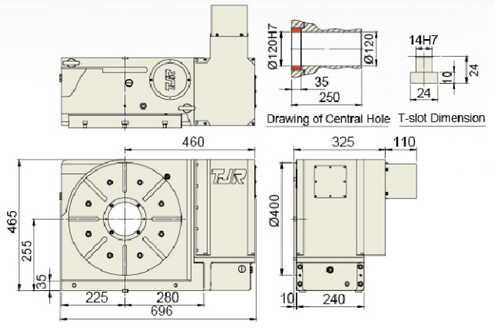

RC-170R

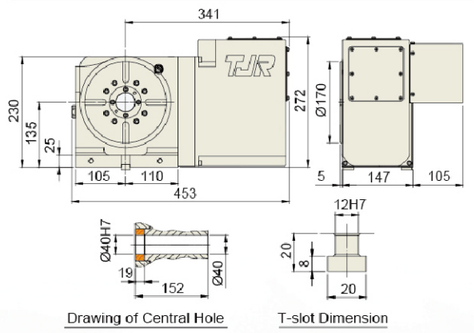

RC-210L (Left Side Motor Type)

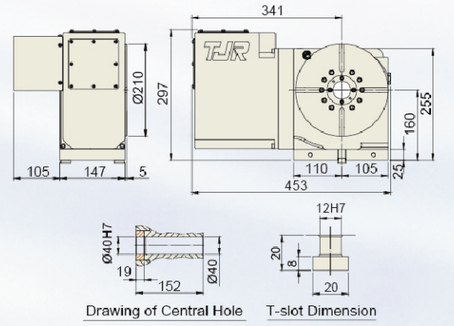

RC-255N (Sheet Metal Cover Reduction)

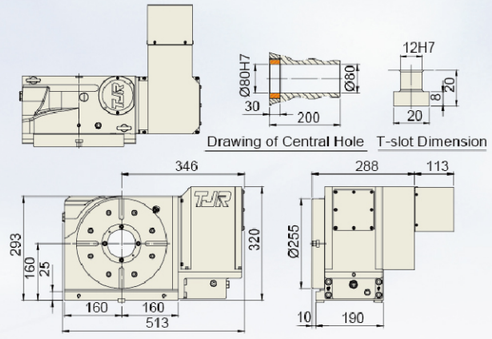

RC-320L (Left Side Motor Type)

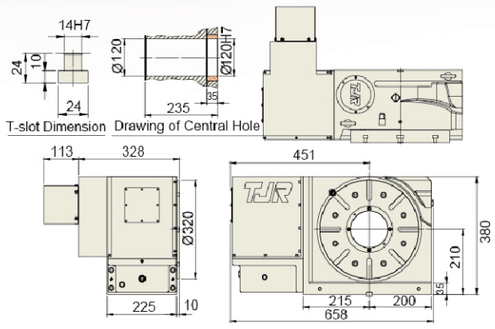

TJR CNC Rotary Table
Exquisite Products of Taiwan. Extreme Ingenuity

Driven by Roller Gear Cam

The 4th & 5th Axis Roller Gear Cam Series

- Pneumatic Brake / Hydraulic Brake

HORIZONTAL and VERTICAL



FAR(s)-160SN-RC255
(Single-arm type)



FAR(s)-170A-RC210
(Compact type)

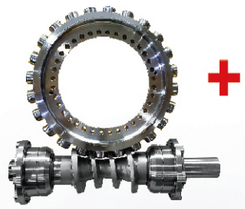

Driven by Roller Gear Cam
(Speed : 80 rpm)



Rotary axis Dual-lead
Alloy steel worm gear
(Optional)

Tilt axis : Driven by Roller Gear Cam
Rotary axis : Driven by Alloy Steel Worm Gear
(Optional)



FAR(s)-170-RC210
(Standard type)



FAR(s)-210-RC210
(Standard type)

Item		Unit	FAR(s)-160SN-RC255		FAR(s)-170A-RC210(H)		FAR(s)-170-RC210(H) / FAR(s)-210-RC210(H)	
Table Diameter		mm	Ø160		Ø170		Ø170 / Ø210	
Diameter of Table Central Hole		mm	Ø35H7 x 30 deep		Ø67		Ø67	
Inner Diameter of Mandrel Sleeve		mm	-		Ø40H7		Ø40H7	
Diameter of Center Through Hole		mm	Ø25		Ø40		Ø40	
Table Height (Horizontal)		mm	Single-arm type 230		245		270	
Table T-slot Width		mm	12H7		12H7		12H7	
Guide Block Width		mm	18h7		18h7		18h7	
Axis		-	Rotary axis	Tilt axis ±110°	Rotary axis	Tilt axis ±100°	Rotary axis	Tilt axis ±100°
Transmission Mechanism		-	Worm gear	Roller Gear Cam	Worm gear	Roller Gear Cam	Worm gear	Roller Gear Cam
Min. Increment		deg.	0.001	0.001	0.001	0.001	0.001	0.001
Indexing Precision (while tilt 0°~+90°)		sec.	40	60	40	60	20	60
Repeatability		sec.	6	8	6	8	6	8
Clamping System (Pneumatic)		kgf/cm²	6	Hyd.35	6	Pne. 6 / Hyd.35	6	Pne. 6 / Hyd.35
Clamping Torque		kgf·m	13	70	25	31 (Pne.) / 50 (Hyd.)	31	31 (Pne.) / 50 (Hyd.)
Servo Motor Model	FANUC	Taper/Stralght	αis4 / βis4	αis12 / βis12	αis4 / βis4	αis12 / βis12	αiF4 /βis8	αis12 / βis12
	MITSUBISHI	Stralght	HF-KP43JW04-S6 / HG-56	HG/HF-154	HG/HF-75 / 105	HG/HF - 104	HG/HF-54 / 104	HG/HF-154
Speed Reduction Ratio		-	1 : 60	1 : 60	1 : 72	1 : 36	1 : 90	1 : 36
Max. Rotation Rate of Table (Calculate with FANUC a Motor)		r.p.m	33.3 *(33.3)	50	33.3 *(33.3)	50	33.3 *(33.3)	50
Allowable Inertia Load Capacity (Horizontal)		kg·cm·sec²	0.8		2.2		2.7 (Ø170) / 4.13 (Ø210)	
Allowable Workpiece Load (dynamic)	0°Horizontal	kg	25		60		75	
	0 ~ 90°Tilt	kg	20		40		50	
Allowable Load (with clamping)	F	kg	600		600		750	
	FxL	kgf	70		31		31	
	FxL	kgf·m	13		31		31	
Driving Torque		kgf·m	9 *(3.7)		18 *(14.6)		18 *(14.6)	
Net Weight (servo motor excluded)		kg	126		-		163	170

*( ) Alloy Steel worm & gear series

★ In accordance with the foreign trade control ordinance, permission of the ministry of economy, trade and industry is required when exporting dual-axis products overseas.

FAR(s)-160SN-RC255 (Single-arm type)

Tilt axis: Driven by Rooler Gear Cam

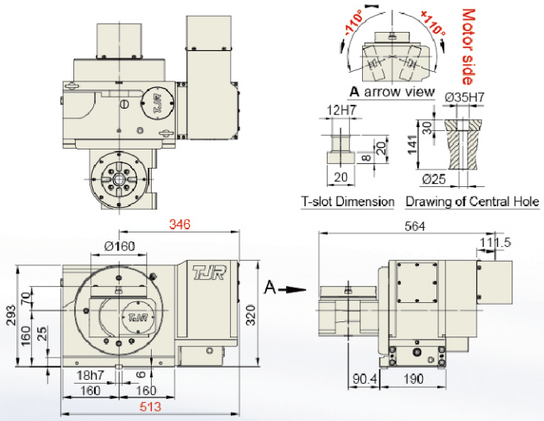

FAR(s)-170A-RC210(H) (Compact type)

Tilt axis: Driven by Rooler Gear Cam

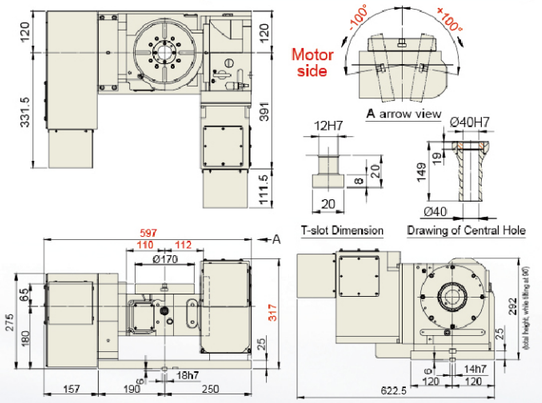

FAR(s)-170-RC210(H) (Standard type)

Tilt axis: Driven by Rooler Gear Cam

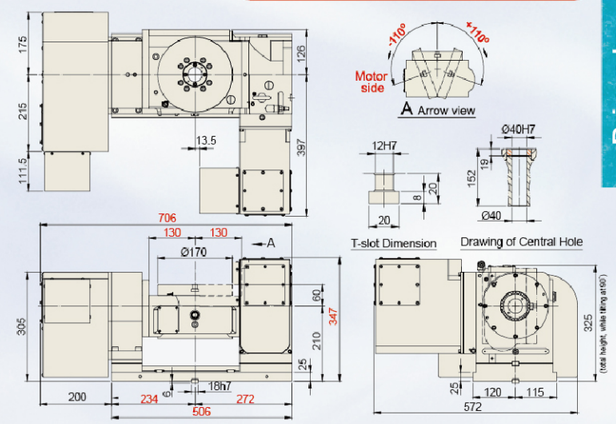

FAR(s)-210-RC210(H) (Standard type)

Tilt axis: Driven by Rooler Gear Cam

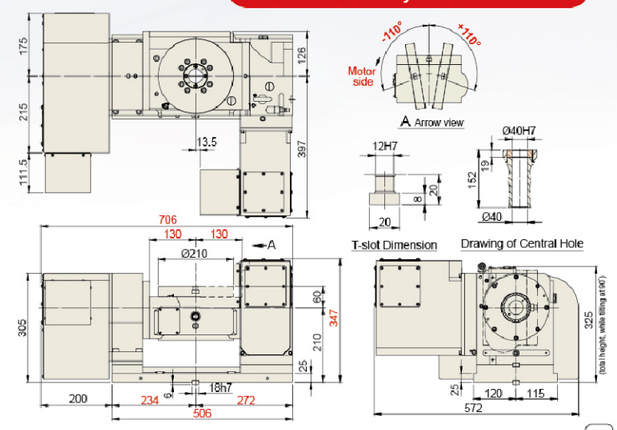

The 4th & 5th Axis Roller Gear Cam Series

- Hydraulic Brake

HORIZONTAL and VERTICAL

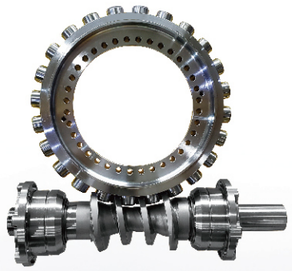

Driven by **Roller Gear Cam**
(Speed : 80 rpm)

AC軸 雙滾子凸輪 傳動



FRC(s)-255CL-RC320
(Extended cradle type)

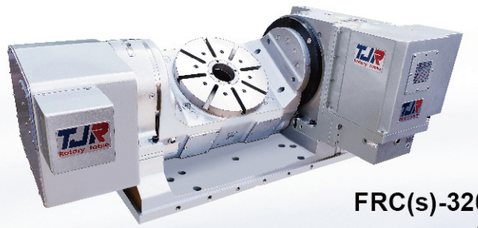

FRC(s)-320CF-RC320
(Cradle type)

Item		Unit	FRC(s)-255CL-RC320 (Extended cradle type)		FRC(s)-320CF-RC320(Cradle type)		FHR-320-RC320 (Standard type)	
Table Diameter		mm	Ø255		Ø320		Ø320	
Diameter of Table Central Hole		mm	Ø110		Ø110		Ø150	
Inner Diameter of Mandrel Sleeve		mm	Ø80H7		Ø80H7		Ø120H7	
Diameter of Center Through Hole		mm	Ø80		Ø80		Ø120	
Table Height (Horizontal)		mm	310		310		355	
Table T-slot Width		mm	12H7		14H7		14H7	
Guide Block Width		mm	18h7		18h7		18h7	
Axis		-	Rotary axis	Tilt axis ±110°	Rotary axis	Tilt axis ±110°	Rotary axis	Tilt axis ±110°
Transmission Mechanism		-	Roller Gear Cam		Roller Gear Cam		Worm & Worm Gear	Roller Gear Cam
Min. Increment		deg.	0.001	0.001	0.001	0.001	0.001	0.001
Indexing Precision (while tilt 0°~+90°)		sec.	20	60	20	60	15	60
Repeatability		sec.	6	8	6	8	6	8
Clamping System (Hydraulic)		kgf/cm²	35	35	35	35	35	35
Clamping Torque		kgf·m	70	175	70	175	115	175
Servo Motor Model	FANUC	Taper / Straight	αiF8 / αis12 / βis12	αiF12 / βis12	αiF8 / αis12 / βis12	αiF12 / βis22	αiF8 / αis12 / βis12	αiF12 / βis22
	MITSUBISHI	Straight	HG/HF-154	HG/HF-154	HG/HF-154	HG/HF-154	HG/HF-104	HG/HF-204
Speed Reduction Ratio		-	1 : 60	1 : 120	1 : 60	1 : 120	1 : 120	1 : 90
Max. Rotation Rate of Table (Calculate with FANUC α Motor)		r.p.m	50	25	50	25	25	33.3
Allowable Inertia Load Capacity (Horizontal)		kg·cm·sec²	16.2		25.6		25.6	
Allowable Workpiece Load (dynamic)	0°Horizontal	kg	200		200		200	
	0 ~ 90°Tilt	kg	150		150		150	
Allowable Load (with clamping)	F	kgf	1600		1600		1800	
	FxL	kgf·m	175		175		175	
	FxL	kgf·m	70		70		115	
Driving Torque		kgf·m	35		35		80	
Net Weight (servo motor excluded)		kg	580		585		-	

*( ) Alloy Steel worm & gear series

★ In accordance with the foreign trade control ordinance, permission of the ministry of economy, trade and industry is required when exporting dual-axis products overseas.

FRC(s)-255CL-RC320 (Extended cradle type)

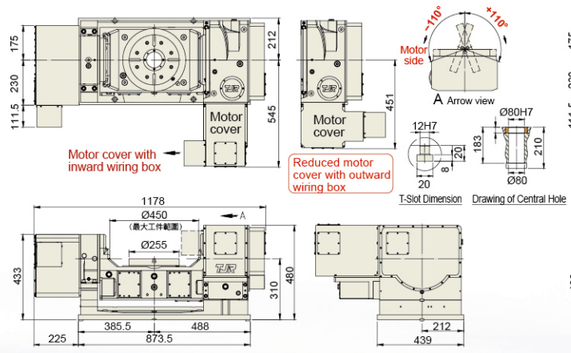

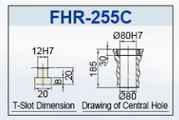

可裝6油孔分配器+光學尺

FRC(s)-320CF-RC320 (Cradle type)

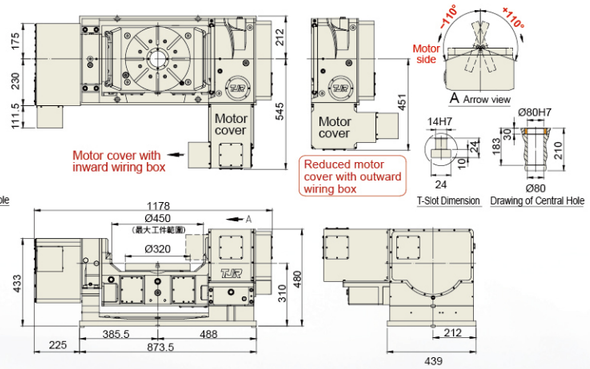

可裝6油孔分配器+光學尺

FHR-320-RC320 (Standard type)

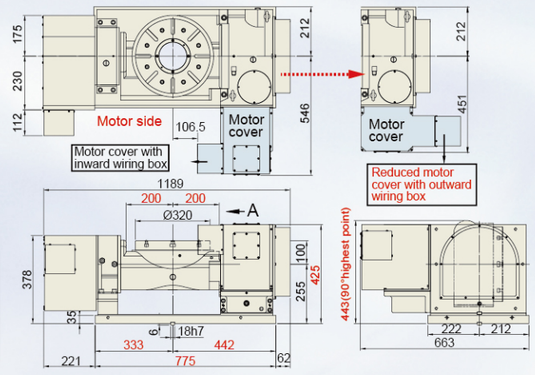

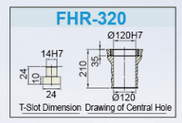

6-port rotary joint can be accommodated.

FHR-320C-RC320 (Cradle type)

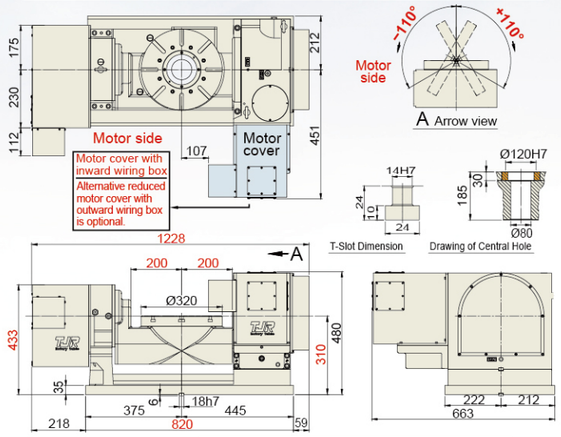

4-port rotary joint can be accommodated.

The 4th & 5th Axis Roller Gear Cam Series

- Pneumatic Brake / Hydraulic Brake



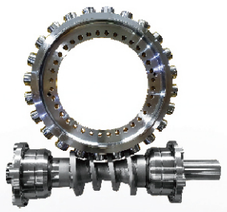

Driven by Roller Gear Cam
(Speed : 80 rpm)



FAR(s)-170-2W-RC255
(2 wheel coupled)



Swivel Spindle Head
HRC-400SP
(Roller Gear Cam)



FHR-255-2W-RC320
(2 wheel coupled)



FHR-350F-2W-RC320-2A
(2 wheel coupled)

Item	Unit	FAR(s)-170-2W-RC255 / FAR(s)-210-2W-RC255		FHR-255-2W-RC320		FHR-350F-2W-RC320-2A		HRC-320	HRC-400SP
Table Diameter	mm	Ø170 / Ø210		Ø255		Ø350		Ø320	Ø400
Diameter of Table Central Hole	mm	Ø67		Ø110		Ø150		Ø150	Ø180
Inner Diameter of Mandrel Sleeve	mm	Ø40H7		Ø80H7		Ø120H7		Ø120H7	-
Diameter of Center Through Hole	mm	Ø40		Ø80		Ø120		Ø120 Big Bore	Ø34
Table Height (Horizontal)	mm	280		325		370		265	265
Table T-slot Width	mm	12H7		12H7		14H7		14H7	-
Guide Block Width	mm	18h7		18h7		18h7		18h7	-
Axis	-	Rotary axis	Tilt axis ±110°	Rotary axis	Tilt axis ±110°	Rotary axis	Tilt axis ±110°	-	-
Transmission Mechanism	-	Worm Gear	Roller Gear Cam	Worm Gear	Roller Gear Cam	Worm Gear	Roller Gear Cam	Roller Gear Cam	Roller Gear Cam
Min. Increment	deg.	0.001	0.001	0.001	0.001	0.001	0.001	0.001	0.001
Indexing Precision (while tilt 0°~+90°)	sec.	40	60	40	60	40	60	20	±10
Repeatability	sec.	6	8	6	8	6	8	6	6
Clamping System (Hydraulic)	kgf/cm²	Pne.6	35	35	35	35	35	35	45
Clamping Torque	kgf·m	31	140	70	175	115	230	115	155
Servo Motor Model FANUC	Taper / Stralght	αiF8 / βis12	αis12 / βis12	αis12 / βis12	αis12 / βis12	αis12 / βis22	αis12 x2	αiF12 / βis22	αiF12 / βis22
Servo Motor Model MITSUBISHI	Straight	HG/HF-154	HG/HF-154	HG/HF-154	HG/HF-204/354	HG/HF-204	HG/HF-154 x2	HG / HF-204	HG/HF-204
Servo Motor Model SIEMENS	Straight	1FK7063	1FK7063	1FK7063	1FK7083	1FK7083	1FK7083 x2	-	1FK7083
Speed Reduction Ratio	-	1:90	1:60	1:150	1:90	1:120	1:90	1:90	1:90
Max. Rotation Rate of Table (Calculate with FANUC α Motor)	r.p.m	44.4 *(33.3)	33.3	16.6	16.6	25	16.6	33.3	33.3
Allowable Inertia Load Capacity (Horizontal)	kg·cm·sec²	2.7(Ø170) / 4.2(Ø210)		2.7 / 4.13		23 (per plate)		44.8 (Vertical)	-
Allowable Workpiece Load (dynamic) 0° Horizontal	kg	50 (per plate)		100 (per plate)		150 (per plate)		350	-
Allowable Workpiece Load (dynamic) 0~90° Tilt	kg	40 (per plate)		75 (per plate)		150 (per plate)		-	Vertical 200
Allowable Load (with clamping) F	kg	750		1000		1800		3000	-
Allowable Load (with clamping) FxL	kgf	140		175		230		300	400
Allowable Load (with clamping) FxL	kgf·m	31		70		115		115	155
Driving Torque	kgf·m	18 *(14.6)		55		80		56 (dynamic)	75 (dynamic)
Net Weight (servo motor excluded)	kg	305 (Ø170) / 312 (Ø210)		740		1080		-	406

*( ) Alloy Steel worm & gear series

★ In accordance with the foreign trade control ordinance, permission of the ministry of economy, trade and industry is required when exporting dual-axis products overseas.

TJR CNC Rotary Table
Exquisite Products of Taiwan. Extreme Ingenuity

FAR(s)-170-2W-RC255 (2 wheel coupled)

Tilt axis : Driven by Roller Gear Cam

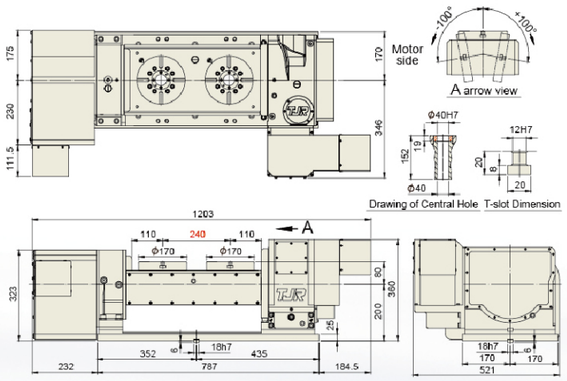

FHR-255-2W-RC320 (2 wheel coupled)

4-port rotary joint can be accommodated.

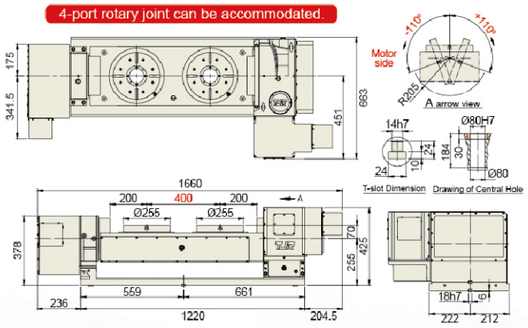

FHR-350F-2W-RC320-2A (2 wheel coupled)

Tilt axis : Driven by Roller Gear Cam

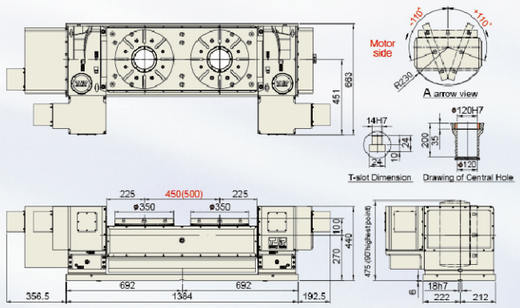

HRC-320

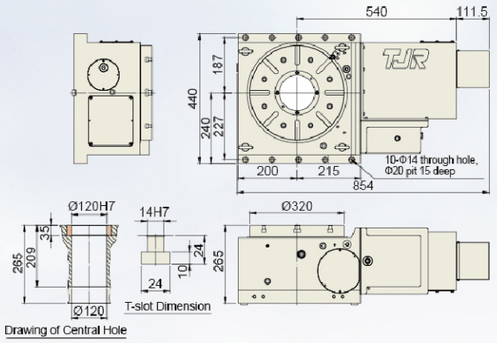

HRC-400SP (Swivel Spindle Head)

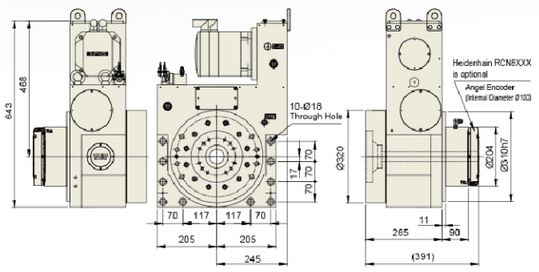

The 4th Axis Direct Drive Motor Series

- Pneumatic Brake

VERTICAL HORIZONTAL

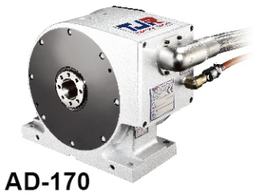

AD-170
without faceplate



AD-261*i*B-FA-CZ
FANUC DDM



AD-260*i*B
without faceplate
(Standard with faceplate)

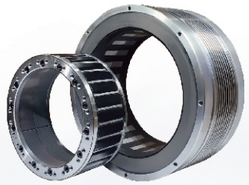

D.D. Motor
(200 rpm)



AD-170
with faceplate



AD-170
(Ex: Machining cell phone)

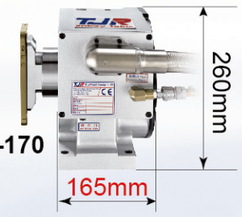

AD-170

Item	Unit	AD - 170	AD - 210	AD - 260*i*B	AD-261*i*B-FA-CZ
Table Diameter	mm	Ø170	Ø210	Ø250	Ø250
Diameter of Table Central Hole	mm	-	-	-	-
Inner Diameter of Mandrel Sleeve	mm	Ø40H7	Ø40H7	Ø46H7	Ø46H7
Diameter of Center Through Hole	mm	Ø40	Ø40	Ø46	Ø46
Center Height (Vertical)	mm	135	160	160	160
Table Height (Horizontal)	mm	-	-	-	-
Table T-slot Width	mm	12H7	12H7	12H7	12H7
Guide Block Width	mm	18h7	18h7	18h7	18h7
Cooling System	-	Free Cooling	Free Cooling	Free Cooling / Oil Cooling	Free Cooling /Oil Cooling
Min. Increment	deg.	0.001	0.001	0.001	0.001
Indexing Precision	sec.	20	20	20	20
Repeatability	sec.	4	4	4	4
Clamping System (Pneumatic)	kgf/cm^2	6	6	6	6
Clamping Torque	Nm	310	310	450 (Powerful)	450 (Powerful)
Servo Motor Model	-	DD Motor	DD Motor	DD Motor	FANUC DD Motor
Speed Reduction Ratio	-	Direct Drive	Direct Drive	Direct Drive	Direct Drive
Rated / Max. Speed	r.p.m	150 / 200	150 / 200	150 / 200	200 / 300
Rated / Max. Cutting Torque	Nm	48 / 143	48 / 143	48 / 143	46(Oil Cooling 62)/143
Allowable Inertia Load Capacity	kg·cm·sec^2	1.08	1.65	4.68	7.8
Allowable Workpiece Load (dynamic) — Vertical	kg	30	30	60	100 (Rated Speed)
Allowable Workpiece Load (dynamic) — with Tailstock	kg	70	70	100	100 (Rated Speed)
Allowable Workpiece Load (dynamic) — Horizontal	kg	-	-	-	-
Allowable Load (with clamping) — F	N	8000	8000	10000	10000
Allowable Load (with clamping) — FxL	Nm	105	105	231	231
Allowable Load (with clamping) — FxL	Nm	310	310	450	450
Net Weight (D.D motor included)	kg	55	61	84	90
Electrical Specification					
Encoder	-	Subject to demand and controller	Subject to demand and controller	Subject to demand and controller	Subject to demand and controller
Voltage (Back E.M.F)	Vrms/100rpm	67.2	67.2	67.2	-
Rotor Poles	-	44	44	44	28
Rated / Max. Current	Arms	4.4 / 13.2	4.4 / 13.2	4.4 / 13.2 (Free Cooling) 11.8 / 34.5 (Water Cooling)	9.3/56.6
Power Rating	KW	0.75	0.75	0.75 / 1.9 (Water Cooling)	-



RT-135



RT-170F

Support table without brake



AD-260*i*B + support table + fixture plate

While using **DDM** rotary table, it's recommended to employ. table without faceplate and simplified support table. Thus, it can increase the available loading capacity for fixtures and workpieces.

AD-170 Direct Drive (200 rpm)

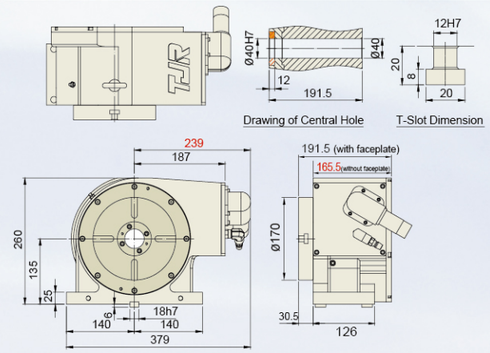

AD-260*i*B Direct Drive (200 rpm)

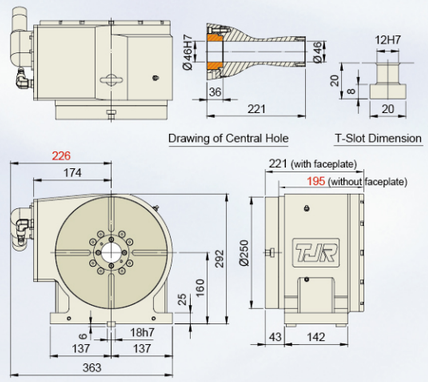

AD-210 Direct Drive (200 rpm)

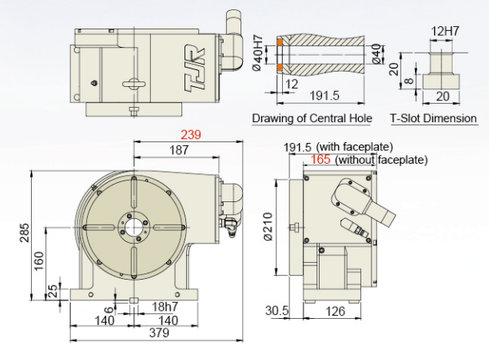

AD-261*i*B-FA-CZ Direct Drive (300 rpm)

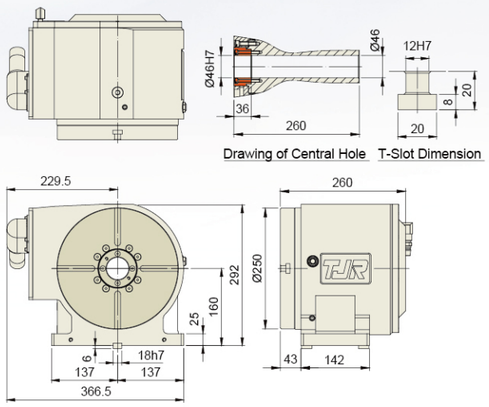

Driven by Direct Drive Motor

TJR CNC Rotary Table
Exquisite Products of Taiwan. Extreme Ingenuity

The 4th & 5th Axis Direct Drive Motor Series
The 4th Axis Direct Drive Motor Series

- Pneumatic Brake / Hydraulic Brake

HORIZONTAL and VERTICAL | HORIZONTAL

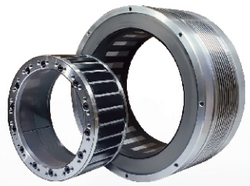

D.D. Motor



FAD-170F
(Two D.D. Motors)



FAD-211-AD261iB-FA-CZ
(Two D.D. Motors)
(FANUC DDM)



FHD-650-iD650
(Two D.D. Motors / Hydraulic Brake)



iHHD-650

Item	Unit	Two D.D. Motors : 300 rpm		Two axis FANUC DDM		Two D.D.Motors		Embedded type
		FAD-170F / FAD-210F		FAD-211-AD261iB-FA-CZ		FHD-650-iD650		iHHD-650
Table Diameter	mm	Ø170 / Ø210		Ø210		Ø650		Ø650
Diameter of Table Central Hole	mm	-		-		-		Ø50 x 30 deep
Inner Diameter of Mandrel Sleeve	mm	Ø40H7		Ø40H7		-		-
Diameter of Center Through Hole	mm	Ø40		Ø40		-		-
Table Height (Horizontal)	mm	250		310		-		-
Table T-slot Width	mm	12H7		12H7		18H7		18H7
Guide Block Width	mm	18h7		18h7		-		-
Axis	-	Rotary axis	Tilt axis ±100°	Rotary axis	Tilt axis ±100°	Rotary axis	Tilt axis ±110°	-
Transmission Mechanism	-	DD Motor	DD Motor	DD Motor	DD Motor	DD Motor	DD Motor	DD Motor
Cooling System	-	Free Cooling	Free Cooling (Water Cooling)	Free Cooling	Free Cooling (Oil Cooling)	Water Cooling	Water Cooling	Water Cooling
Min. Increment	deg.	0.001	0.001	0.001	0.001	0.001	0.001	0.001
Indexing Precision (while tilt 0°~+90°)	sec.	20	30	20	30	20*1	30*1	20*1
Repeatability	sec.	4	4	4	4	4	4	4
Clamping System (Pneumatic)	kgf/cm²	6	6	6	6	Hyd. 35	Hyd. 35	Hyd. 35
Clamping Torque	Nm	310	450 (Powerful)	310	450	3700	5000	3700
Servo Motor Model: FANUC	Taper shaft with key	DD Motor	DD Motor	FANUC DiS DD Motor	FANUC DiS DD Motor	DD Motor	DD Motor	DD Motor
Servo Motor Model: MITSUBISHI	Taper shaft with key	DD Motor	DD Motor	FANUC DiS DD Motor	FANUC DiS DD Motor	DD Motor	DD Motor	DD Motor
Speed Reduction Ratio	-	Direct Drive	Direct Drive	Direct Drive	Direct Drive	Direct Drive	Direct Drive	Direct Drive
Rated / Max. Speed	r.p.m	200 / 300	50 / 150	200 / 300	150 / -	80 / 210	50 / 50	80 / 210
Rated / Max. Cutting Torque	Nm	29 / 143	48 (Water cooling 118) / 143	48 (Water cooling 80) / 200	57 (Oil cooling 80) / 300	554 / 741	1890 / 2478	554 / 741
Allowable Inertia Load Capacity (Horizontal)	kg·cm·sec²	1.08 (Ø170) / 1.65 (Ø210)		1.65		264		264
Allowable Workpiece Load: 0° Horizontal	kg	50		50 (Rated Speed)		500		
Allowable Workpiece Load: 0°~90° Tilt	kg	30		30 (Rated Speed)		300		400
Allowable Load (with clamping): F	N	4000		4000		25000		40000
Allowable Load (with clamping): FxL	Nm	450		450		5000		5000
Allowable Load (with clamping): FxL	Nm	310		310		3700		3700
Net Weight (D.D motor included)	kg	220 (Ø170) / 223 (Ø210)		237		1173		479
Electrical Specification								
Encoder	-	Renishaw or Heidenhain		FANUC aiCZ		Heidenhain		Heidenhain
Voltage (Back E.M.F)	Vrms/100rpm	Rotary axis 38.8		-	-	125.6		125.6
Rotor Poles	-	44		Rotary axis : 28	Tilt axis : 28	66		66
Rated / Max. Current	Arms	4.25 / 12.75		10.2 / 28.3 (Rotary axis)	19.5 / 53.2 (Tilt axis)	29.8 / 75.7 (Water Cooling)		29.8 / 75.7 (Water Cooling)
Power Rating	kW	0.77	0.76	-	-	4.7	10.1	4.7

★ In accordance with the foreign trade control ordinance, permission of the ministry of economy, trade and industry is required when exporting dual-axis products overseas.

*1. Indexing precision can be better after installing an additional angle encoder. Please refer to the table on page 70 for more details.

FAD-170F (Two D.D. Motors)

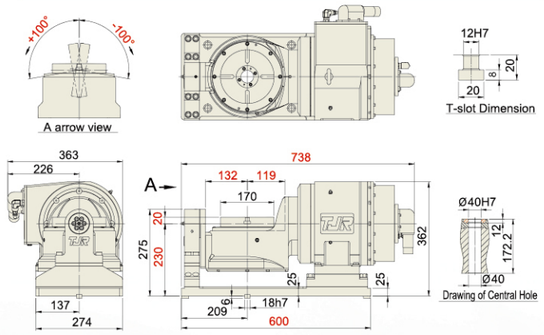

FAD-211-AD261iB-FA-CZ (Two axis FANUC DDM)

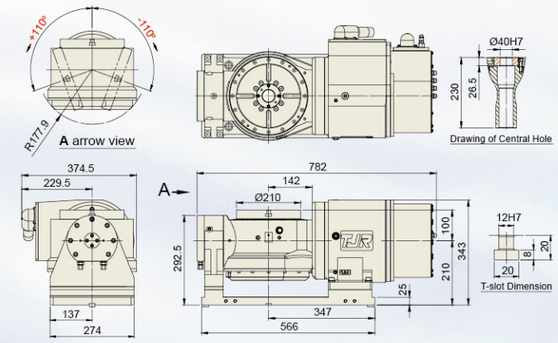

FHD-650-iD650 (Two D.D. Motors) (210 rpm)

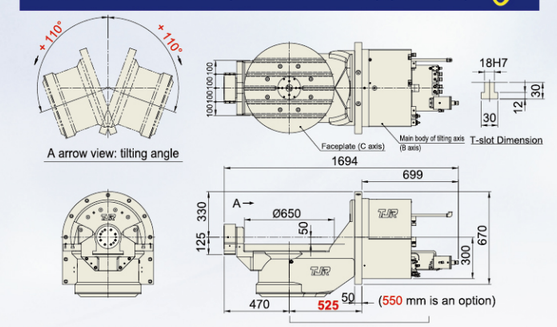

iHHD-650 (Embedded type) (210 rpm)

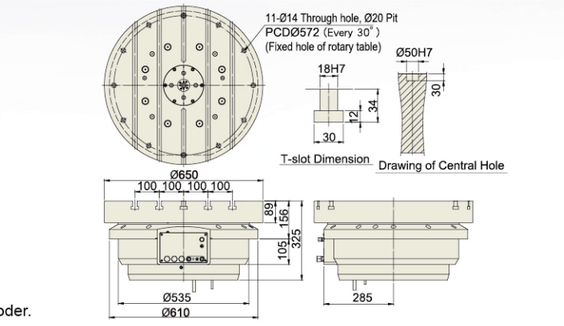

TJR CNC Rotary Table
Exquisite Products of Taiwan. Extreme Ingenuity

The 4th & 5th Axis Direct Drive Motor Series
The 4th Axis Direct Drive Motor Series

- Pneumatic Brake





AD-250HS
(super high speed: 2000 rpm)
Can work as a mill / turn component



FAD-300F-HS
Tilt axis : 50 rpm
Rotary axis : 2000 rpm

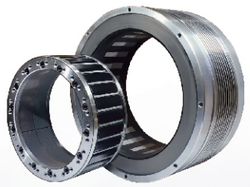

D.D. Motor

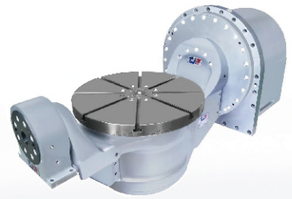

FAD-500FHS-AD500i-480



FAD-400HS-AD500i-420
(The faceplate can be customized. Please refer to the below drawing for the standard faceplate.)

Item	Unit	As a mill / turn component	Two D.D. Motors : 2000 rpm As a mill / turn component		FAD-400HS-AD500i-420 / FAD-500FHS-AD500i-480	
		AD - 250HS	FAD-300F-HS			
Table Diameter	mm	Ø250	Ø300		Ø400 / Ø500	
Diameter of Table Central Hole	mm	Ø50H7 x 5.5 deep	Ø25H7 x 12 deep		Ø25H7 x 12 deep	
Inner Diameter of Mandrel Sleeve	mm	-	-		-	
Diameter of Center Through Hole	mm	-	-		-	
Center Height (Vertical)	mm	200	-		-	
Table Height (Horizontal)	mm	335	385		-	
Table T-slot Width	mm	-	14H7		14H7	
Guide Block Width	mm	-	14h7		-	
Axis	-	-	Rotary axis	Tilt axis ±120°	Rotary axis	Tilt axis ±110°
Cooling System	-	Water Cooling	Water Cooling	Water Cooling	Water Cooling	Water Cooling
Transmission Mechanism	-	D.D. Motor	D.D. Motor	D.D. Motor	D.D. Motor	D.D. Motor
Min. Increment	deg.	0.001	0.001	0.001	0.001	0.001
Indexing Precision (while tilt 0°~+90°)	sec.	20	20	30	20	25
Repeatability	sec.	4	4	4	4	4
Clamping System (Pneumatic)	kgf/cm²	6	6	6	6	6
Clamping Torque	Nm	450 (Powerful)	430	730	850	2000
Servo Motor Model	-	DD Motor	DD Motor	DD Motor	DD Motor	DD Motor
Speed Reduction Ratio	-	Direct Drive	Direct Drive	Direct Drive	Direct Drive	Direct Drive
Rated / Max. Speed	r.p.m	1100 / 2000	818 / 2000 (600VDC)	50 / 50	596 / 1200 (Ø400) or 596 / 800 (Ø500)	50 / 50
Rated / Max. Cutting Torque	Nm	113 / 169	113 / -	554 / 741	402 / -	1217 / 2120
Allowable Inertia Load Capacity (Horizontal)	kg·cm·sec²	3.1	-		40 (Ø400) / 62.5 (Ø500)	
Allowable Workpiece Load (dynamic) 0°Horizontal	kg	-	100 (Rated Speed)		200 (balanced load)	
Allowable Workpiece Load (dynamic) 0°~90° Tilt	kg	Vertical 50	100 (Rated Speed)		100 (balanced load)	
Allowable Load (with clamping) F	N	10000	-		15000	
Allowable Load (with clamping) FxL	Nm	1150	730		2000	
Allowable Load (with clamping) FxL	Nm	550	430		850	
Net Weight (D.D motor included)	kg	158	730		- (Ø400) / 914 (Ø500)	
Electrical Specification						
Encoder	-	Subject to demand and controller	Renishaw or Heidenhain		Renishaw or Heidenhain	
Voltage (Back E.M.F)	Vrms/100rpm	33	Rotary axis：33		Rotary axis：45.55	
Rotor Poles	-	22	22		44	
Rated / Max. Current	Arms	26.5 / 50.2	26.5 / 50.2		Rotary axis：66.9 / 151	
Power Rating	KW	9.9	9.9	4.7	25.6	6.5

★ In accordance with the foreign trade control ordinance, permission of the ministry of economy, trade and industry is required when exporting dual-axis products overseas.

Driven by Direct Drive Motor

AD-250HS (2000 rpm)

As a mill / turn component

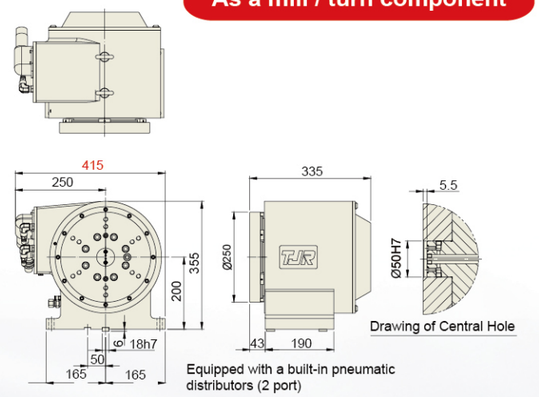

FAD-300F-HS (2000 rpm)

As a mill / turn component

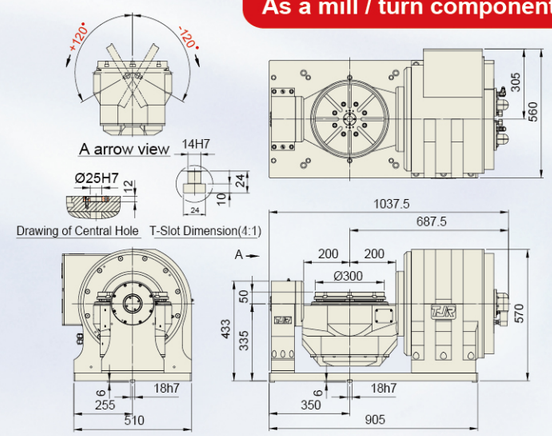

FAD-400-HS (1200 rpm)

As a mill / turn component

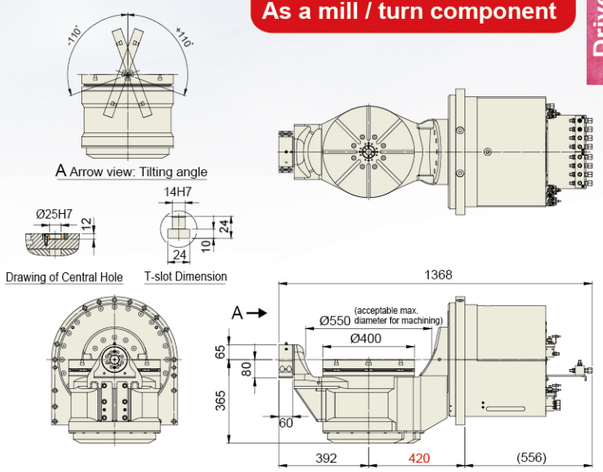

Driven by Direct Drive Motor

Support Table

RTA Series (Pneumatic Brake) RTA-125/170/210
RTH Series (Hydraulic Brake) RTH-255/320/400A

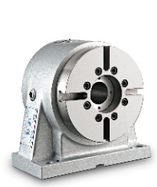
▲RTA-170

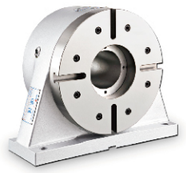
▲RTH-255

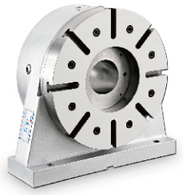
▲RTH-320

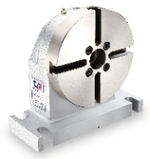
▲RT-170F


▲RT-135

RTA-125 (Pneumatic brake 13 kgf·m) (Weight：18kg)

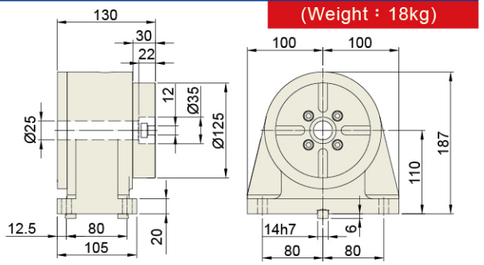

RTH-255 (Hydraulic brake 70 kgf·m) (Weight：57kg)

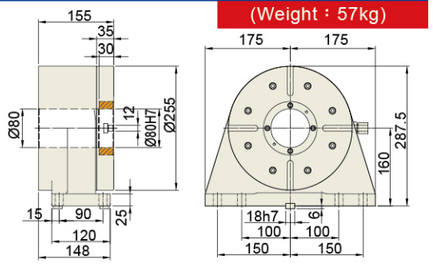

RTA-170 (Pneumatic brake 31 kgf·m) RTA-170H (Hydraulic brake 55 kgf·m) (Weight：29kg)

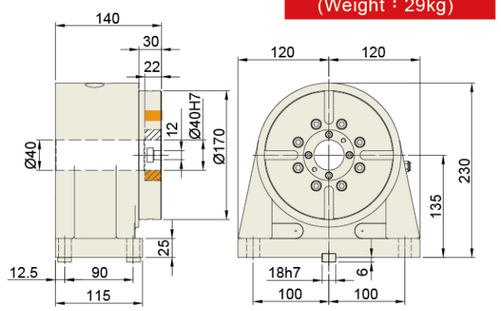

RTA-210 (Pneumatic brake 31 kgf·m) RTA-210H (Hydraulic brake 55 kgf·m) (Weight：35kg)

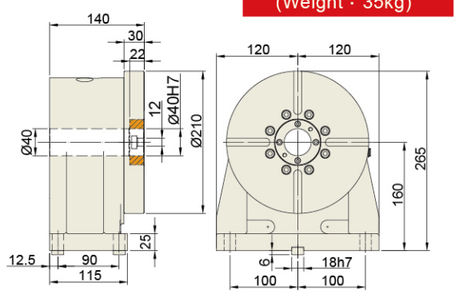

RTH-320 (Hydraulic brake 115 kgf·m) (Weight：83kg)

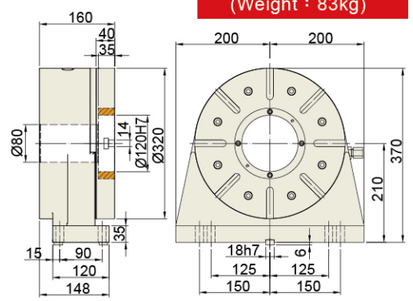

RTH-400A (Hydraulic brake 115 kgf·m) (Weight：106kg)

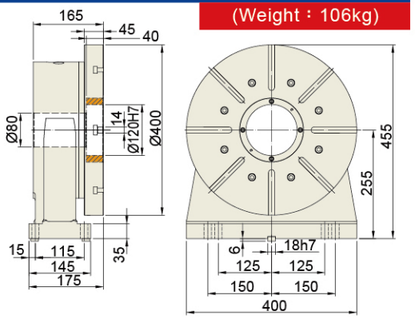

TJR CNC Rotary Table
Exquisite Products of Taiwan. Extreme Ingenuity

Manual Tailstock

(For any model exceeding 170, **MT4#** is employed to provide higher rigidity)

TTJ Series
ATTJ Series (Pneumatic)
HTTJ Series (Hydraulic)

TTJ-125~400
ATTJ-125~210
HTTJ-210~400
TTJ-125A=MT2


▲TTJ-125A


▲TJ-210
(with Fixed Taper)

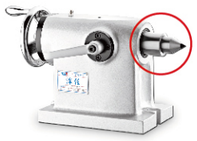
▲TTJ-210
(with Replaceable Taper)

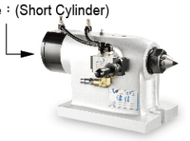

▲ATTJ-170
(with Pneumatic switching valve)

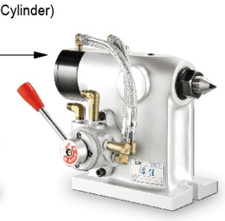

▲HTTJ-320
(with Hydraulic switching valve)

TTJ-125A (For light cutting) (Weight：8.5kg)

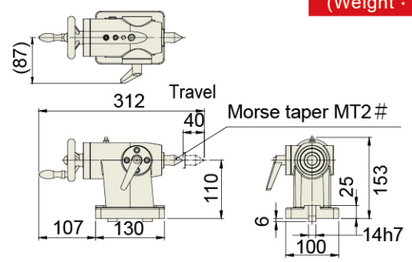

TJ / TTJ

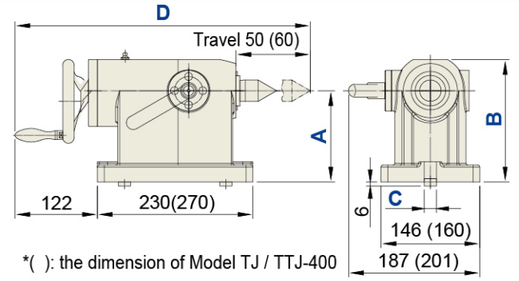

*( ): the dimension of Model TJ / TTJ-400

RT-170F (Without brake)

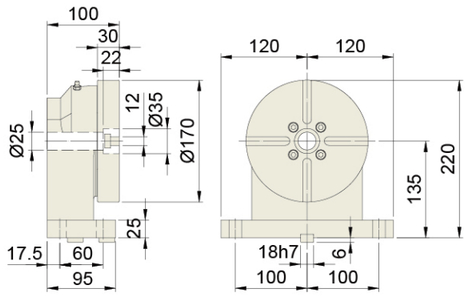

RT-135 (Simplified type / Without brake)

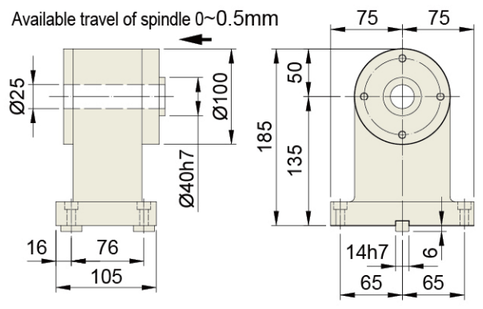

ATJ/ATTJ HTJ/HTTJ

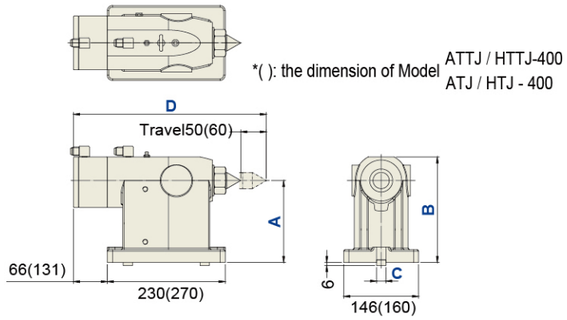

Manual Tailstock Series (Unit：mm)

Model	A	B	C	D	Weight Kg
TJ / TTJ-125	110	156	14	423/435.5	21.5
TJ / TTJ-170	135	181	18	423/435.5	23
TJ / TTJ-210	160	206	18	423/435.5	25
TJ / TTJ-255	160	206	18	423/435.5	25
TJ / TTJ-320	210	256	18	423/435.5	29
TJ / TTJ-400	255	310	18	487/503.5	48

Manual Tailstock Series with Pneumatic / Hydraulic switching valve (Unit：mm)

Model	A	B	C	D	Weight Kg
ATJ / ATTJ-125	110	156	14	363/376	21
ATJ / ATTJ-170	135	181	18	363/376	23
ATJ / ATTJ-210 HTJ / HTTJ-210	160	206	18	363/376	25
HTJ / HTTJ-255	160	206	18	363/376	25
HTJ / HTTJ-320	210	256	18	363/376	29
HTJ / HTTJ-400	255	310	18	496/495	50

CNC Rotary Table + Support Table + Connection Plates

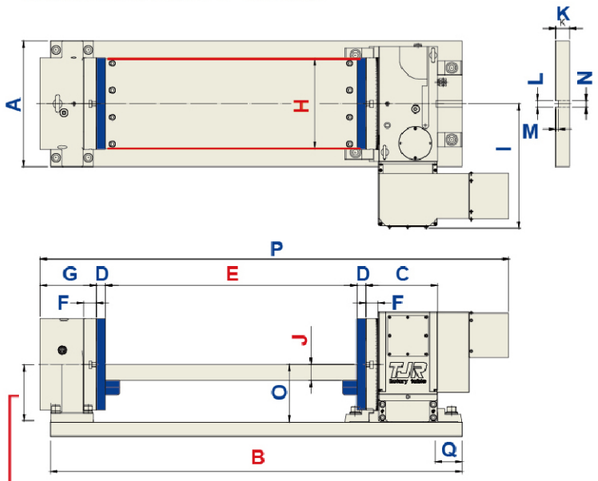

The plane of middle plate is at the same height as the center of rotary table (standard type)
(An exception: the plane of AR-125 / RTA-125 middle plate is 5 mm higher than the center of rotary table)

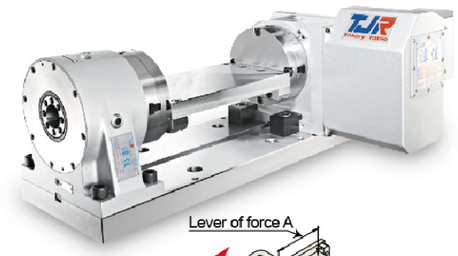

Please keep us informed before ordering while the lever of force A exceeds the table radius

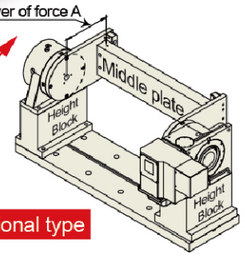

Optional type

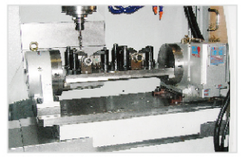

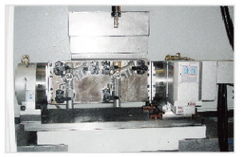

(Example of workpiece installation)

Specification ※ ※ ※ ※

Model /Dimension	A	B	C	D	E	F	G	H	I	J	K	L	M	N	O	P	Q
AR-125 / RTA-125	250	725	152	20	400	30	130	125	302	30	35	14	8	14	115	828	0
AR-170(H) / RTA-170(H)	300	911	152	25	500	30	140	170	336	35	40	18	8	18	135	947	69
AR-210(H) / RTA-210(H)	300	1011	152	25	600	30	140	200	336	40	40	18	8	18	160	1047	69
AR-250(H) / RTA-250(H)	300	1020	160	25	600	38	140	250	336	40	40	18	8	18	160	1055	69
HR-255N / RTH-255	350	1148	200	25	700	35	155	250	346	45	40	18	8	18	160	1305	69
HR-320N / RTH-320	400	1297	235	30	800	40	160	300	416	45	40	18	8	18	210	1460	69
HR-400N / RTH-400A	450	1455	250	30	900	45	175	400	457	45	40	18	8	18	255	1572	69

※J is the thickness of the middle plate, recommended for manufacturing.
If the thickness is not enough, the middle plate will be easy to deform when twisted.

(Unit：mm)

Disk L-block



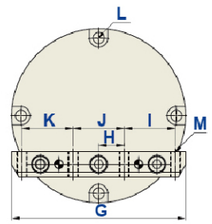

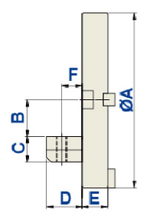

Specification (Unit：mm)

Model /Dimension	ØA	B	C	D	E	F	G	H	I	J	K	L	M
AR-125	Ø125	25	25	25	20	12.5	120	27	25	54	25	M10	4-M8
AR-170(H)	Ø170	35	25	35	25	20	170	25	50	50	50	M10	4-M10
AR-210(H)	Ø210	40	35	40	25	20	200	27.5	55	55	55	M10	4-M10
HR-255	Ø250	45	40	40	25	20	250	37.5	75	75	75	M10	4-M10
HR-320	Ø320	45	45	45	30	22.5	300	42.5	85	85	85	M12	4-M12
HR-400	Ø400	45	45	45	30	22.5	400	75	80	150	80	M12	4-M12

TJR CNC Rotary Table
Exquisite Products of Taiwan. Extreme Ingenuity

Accessories Series



▲ Installation of Manual Three-jaw Chuck



▲ Three-jaw Chuck



▲ Flange Disk



▲ AIC Hydraulic Controller

Hydraulic cylinder



▲ Installation of Hydraulic Three-jaw Chuck

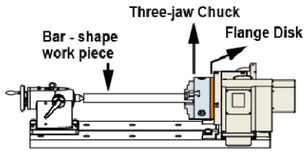

▲ Diagram of Chuck Installation



▲ Single axis controller for Direct Drive Motor (DD SAC)



▲ Single axis controller (SAC) / Dual axis controller (DAC)

Specification Table of Manual Three-jaw Chuck

Specification Table of Manual Three-jaw Chuck				Max. available diameter of bar-shape workpiece which can go through hole of chuck.	Through hole of chuck adapter.	The thickness of chuck adapter					
Model・Dimension	Gripping Range O.D.Range / I.D. Range	Manual chuck thickness	Through hole of chuck			AR-125	AR-170/ 210/250(H)	RC-170/ 210/250	HR-255 HI-255	HR/HI- 320-400	HR-500 HI-500
SK-4	Ø3-Ø95 / Ø29-Ø84	59	Ø24	Ø24	Ø28	16					
SK-5	Ø3-Ø110 / Ø33-Ø100	60	Ø32	Ø28	Ø28	16					
SK-6	Ø4-Ø160 / Ø55-Ø150	67	Ø45	Ø30	Ø30		16	16			
SK-7	Ø8-Ø180 / Ø62-Ø170	76.5	Ø58	Ø30	Ø30		16	16	20		
SK-8	Ø8-Ø190 / Ø68-Ø180	76.5	Ø58	Ø30	Ø30		16	16	20	25	
SK-9	Ø11-Ø220 / Ø70-Ø210	84	Ø70	Ø70	Ø70				20	25	
SK-10	Ø12-Ø260 / Ø80-Ø250	89	Ø89	Ø70	Ø70				20	25	
SK-9	Ø11-Ø220 / Ø70-Ø210	84	Ø70	Ø70	Ø110				20	25	
SK-10	Ø12-Ø260 / Ø80-Ø250	89	Ø89	Ø89	Ø110				20	25	
SK-12	Ø15-Ø300 / Ø90-Ø290	96	Ø105	Ø105	Ø110					25	
SK-12	Ø15-Ø300 / Ø90-Ø290	96	Ø105	Ø105	Ø210					25	
SK-16	Ø30-Ø380 / Ø110-Ø350	122	Ø160	Ø160	Ø210						28
SK-16	Ø30-Ø380 / Ø110-Ø350	122	Ø160	Ø160	Ø270						28

Unit：mm

Servo Motor Reference Table (Please use oil-proof motors)

The data in the CNC rotary table specification sheet are calculated based on FANUC αiF servo motors. If other brands of servo motors are employed, please refer to the below list in order to select the suitable non-Fanuc servo motors whose sizes and features are similar to assigned Fanuc αiF ones. But, the below list is not suitable for the rotary axis of FAR-100/160SN and FAR-170A. Please consult with TJR to confirm the model of servo motor while placing order.

FANUC	αiF2 / 5000 αiS4 / 4000 ßiS4 / 4000	αiF4 / 4000 αiS8 / 4000 ßiS8 / 3000	αiF8 / 3000 αiS12 / 4000 ßiS12 / 3000	αiF12 / 3000 αiS22 / 4000 ßiS22 / 2000	αiF22 / 3000 αiS22 / 4000 αiS40 / 4000	αiF40 / 3000 αiS40 / 4000 αiS60 / 4000
MITSUBISHI	HF-75T / HG75T	HF-54T / HG104T	HG154S	HF-204S / HG204S	HF-354S / HG354S	HF-703S
YASKAWA	SGM7J-08A	SGM7G-09A	SGM7G-13A SGM7G-20A	SGM7G-30A	SGM7G-30A SGM7G-44A	SGM7G-44A
SIEMENS	1FK7042	1FK7060	1FK7063	1FK7083	1FK7101	1FK7103 / 1FK7105
HEIDENHAIN	QSY-96A	QSY-116C	QSY-116E QSY-130C	QSY-155B	QSY-155D	QSY-190D
SYNTEC	AM3-60	AM5-40	AM8-40 AM11-40	AM18-40	AM28-40	AM35-20(Ø35)

※The servo motor models of the above list are actually categorized by motor sizes from the perspective of installation on the rotary tables. However, please do check the compatibility of servo motor based on the specification of NC control on the machining center.

※Please employ higher torque motor while using connection plates and fixtures with support table.



Accessories Series

Pneumatic / Hydraulic rotary joint : (can be equipped with 2, 4, 6, 8 holes)



Air Hydraulic Booster Unit :
Timing for applications
1. Use hydraulic brake rotary table
2. Use hydraulic brake rotary table + manual tailstock

2 holes : 1 input ; 1 output



8 holes : 4 input ; 4 output

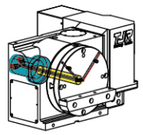

Application diagram – rotary joint pneumatic / hydraulic distributor
When mounting pneumatic/hydraulic fixtures, please use rotary joint and disk L-blocks equipped with air/oil holes so that the air/fluid can go through the center-through hole to avoid intertwining while the rotary table spins.



Hydraulic Power Unit :
Timing for applications
1. Use hydraulic brake rotary table + rotary tailstock
2. Use hydraulic brake rotary table + rotary tailstock + hydraulic fixtures

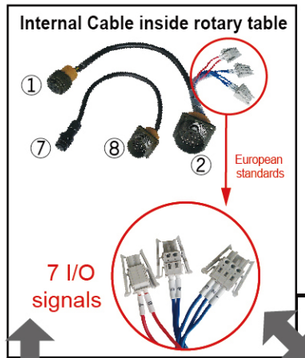

Cable assembly we provide (Standard)

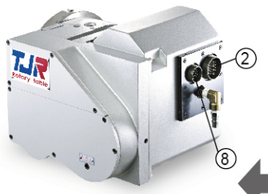

Separated wiring of adaption and connection for power cable and feedback cable respectively.

※ As shown in the right diagram, internal cables include:
No. ① - ② power cable
No. ⑦ - ⑧ feedback cable
7 I/O signals for rotary table

※ TJR can also provide
③ ~ ⑥ and ⑨ - ⑫ cables

TJR Power (& Signal) & Feedback Cable Diagram

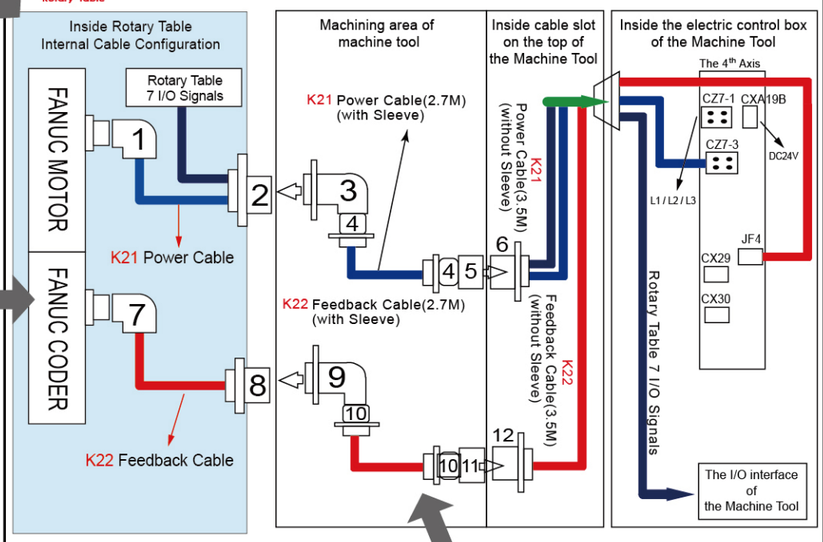

Cable assembly the customer provide (Optional)



If you prefer any one of the above-mentioned types of cable assembly, we will provide only the rotary table [7 (air brake) / 5 (oil brake)] I/O signal connector. You need to prepare the rest.

Cables located inside machining area of machine tool.

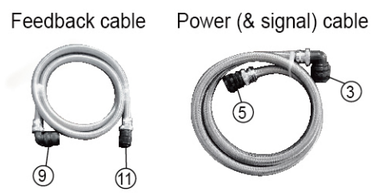

TJR CNC Rotary Table
Exquisite Products of Taiwan. Extreme Ingenuity

Take Heidenhain for example

	Heidenhain model of angle encoder	Fargor model of angle encoder	Angle encoder accuracy	Rotary table accuracy C axis	Rotary table accuracy A axis
Absolute	ECN-2190F (FANUC)	H2AF-23-D87	± 10”	-	Within 30”
	ECN-2190M (MITSUBISHI)	H2AM-23-D87			
	ECN-2110 (SIEMENS)	H2AD-23-D87			
		H2AD-23-D87+EC-PA-DQ1 don't need SMC-20			
	RCN-2391F (FANUC)	H2AF-26-D90	± 4”	Within 10”	Within 20”
	RCN-2391M (MITSUBISHI)	H2AM-26-D90			
	RCN-2311 (SIEMENS)	H2AS-26-D90			
		H2AD-26-D90+EC-PA-DQ1 don't need SMC-20			
	RCN-2591F (FANUC)	H2AF-28-D90-2	± 2”	Within 8”	Within 15”
	RCN-2591M (MITSUBISHI)	H2AM-28-D90-2			
	RCN-2511 (SIEMENS)	H2AS-26-D90-2			
		H2AD-26-D90-2+EC-PA-DQ1 don't need SMC-20			
	RCN-8391F (FANUC)	H2-AF-29-D200i100-2	± 2”	Within 6”	-
	RCN-8391M (MITSUBISHI)	H2-AM-29-D200i100-2			
	RCN-8311 (SIEMENS)	H2-AS-29-D200i100-2			

※ Not any rotary table can be equipped with above-mentioed angle encoder. Please check the compatibility between rotary table and angle encoder with TJR after rotary table model is confirmed.

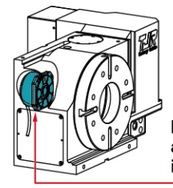

Diagram of angle encoder installation



Angle encoder

Accuracy comparison sheet while using angle encoder

1 Spindle bearings strength

TJR	Others	Others
Radial & axial preloading bearing	Taper roller bearing	Cross roller bearing
 Large diameter	 Small diameter	 Small diameter
Suitable for heavy-duty cutting in the horizontal and vertical directions.	Only suitable for light cutting	Only suitable for light cutting

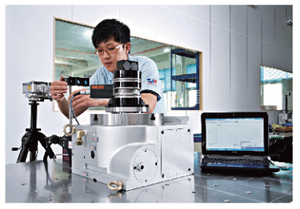

Laser measuring equipment [Indexing precision testing]

2 Advanced inspection facilities



3D measuring equipment
Geometry precision testing





TJR CNC Rotary Table
Exquisite Products of Taiwan. Extreme Ingenuity

Geometry Precision Test Standard of Rotary Table (Unit：mm)

AR/HR (single axis)



Inspection Items	Flatness of table top (Lower in the center) Total Length	Runout of table top during rotation Per 300mm	Parallelism of table top to frame bottom Total Length	Runout of table central hole Front	Perpendicularity of table top to frame bottom Total Length	Perpendicularity of table top to frame bottom guide blocks Total Length	Indexing Precision (Measured by optical instrument) Accumulative tolerance	Parallelism of centerline between rotary table and tailstock frame bottom guide blocks Per 300mm	Height Difference between Center Line of Rotary Table and that of tailstock (tailstock center line should be higher)
AR-125	0.01	0.015	0.02	0.01	0.01	0.02	40”	0.02	0.02
AR-170(H)/210(H)/250(H)	0.01	0.015	0.02	0.01	0.01	0.02	20”	0.02	0.02
AR-170(H)B/210(H)B/250(H)B	0.01	0.015	-	0.01	0.01	0.02	20”	0.02	0.02
HR-255/320/400	0.015	0.015	0.02	0.01	0.01	0.02	15”	0.02	0.02
HR-500	0.02	0.015	0.02	0.01	0.02	0.02	15”	0.02	0.02
HR-630 / HR-800	0.03	0.02	0.03	0.01	0.03	0.03	15”	0.02	0.02

FHR (dual axes)



Inspection Items	Flatness of table top (Lower in the center) Total Length	Runout of table top during rotation Per 300mm	Parallelism of table top to frame bottom Total Length	Runout of table central hole Front	Parallelism between center line of tilting axis and bottom Total Length	Tilt axis - indexing precison (seconds)	Rotary axis - indexing precision (seconds) Accumulative tolerance	Parallelism between rotary table and positioning block of bottom
FAR-125	0.015	0.015	0.02	0.01	0.02	60”	40”	0.02
FAR-170 / 210	0.015	0.015	0.02	0.01	0.02	60”	20”	0.02
FHR-255	0.015	0.015	0.02	0.01	0.02	60”	15”	0.02
FHR-320 / 400	0.015	0.015	0.02	0.01	0.02	60”	15”	0.02
FHR-500	0.02	0.015	0.02	0.01	0.02	60”	15”	0.02
FHR-630	0.02	0.015	0.02	0.01	0.02	60”	15”	0.02
MTHR-255	0.02	0.02	0.02	0.01	0.02	-	15”	0.02

Specification – Clamping device

Examples of special clamping device

Standard Clamping device

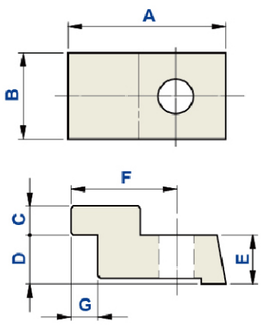

Model	Standard Clamping Device						
	A	B	C	D	E	F	G
AR-125	63	35	12	20	20	43	11
AR-170(H)	78	40	12	25	22	49	11
AR-210(H)	78	40	12	25	22	49	11
AR-255H	78	40	12	25	22	49	11
HR-255	78	40	12	25	22	49	11
HR-320	78	40	15	35	25	49	11
HR-400	78	40	15	35	25	49	11
HR-500	63	60	18	40	58	33	18
HR-630	63	60	18	40	58	33	18
HI-255	78	40	12	25	22	49	11
HI-320	78	40	15	35	25	49	11
HI-500	63	60	18	40	58	33	18

※When using clamping devices other than the above, please use suitable ones that are available in the market or order tailor-made ones from TJR.

(Unit：mm)

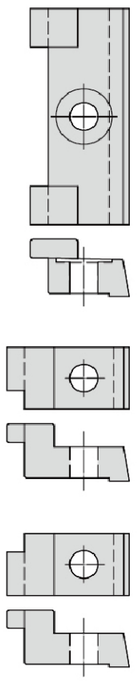

Rotary angle measurement of rotary table

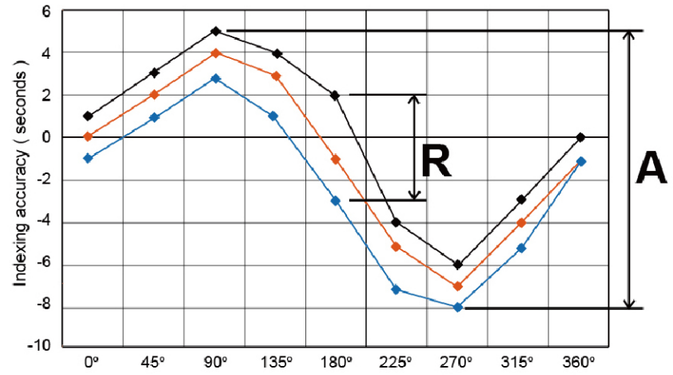

The measurement of ISO 230-2

- **Indexing Precision**
  Rotate the axis in one direction and measure all the indexing values at equally divided and fixed angles (including at least 0°, 90°, 180°, 270°). Take the summary of the maximum positive difference and the maximum negative difference (absolute value) of all the measured values.

- **Repeatability**
  Repeatedly rotate the axis in one direction and measure all the indexing values at equally divided and fixed angles (including at least 0°, 90°, 180°, 270°). Get the maximum differences of all measured indexing values at each fixed angle. Then, pick the biggest values from the measured maximum differences of all angles.



Examples of applications: TJR can work with all brands of control systems and machines.

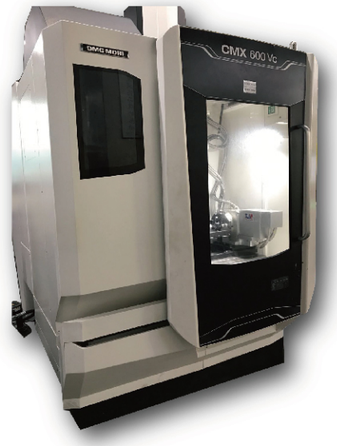











TJR CNC Rotary Table
Exquisite Products of Taiwan. Extreme Ingenuity

TJR Global Sales

Innovative Product **Integrity Business** **Responsible Service**



Appearance of Taiwan Plant

China Kunshan Plant



EMO Hannover_Germany

TIMTOS x TMTS_Taipei, Taiwan

JIMTOF Tokyo, Japan

ITES_Shenzhen, China